Northland
MOTOR TECHNOLOGIES

Innovation | Power | Performance

MOTOR CATALOG

NORTHLAND MOTOR TECHNOLOGIES is an electromechanical development and manufacturing business focused on providing motors, blowers, and controls. We focus on critical OEM applications with moderate to high production rates. Our manufacturing capabilities include ongoing highly automated and work-cell production in the United States.

NORTHLAND strives to work with our customers to customize our offering to fit their needs. We use our adaptive technology and vertical integration to meet the needs of our customers. We take pride in providing the highest level of customer support to both our internal and external customers.

We are constantly striving to improve our products and incorporate the latest technologies. We are resolved to keep our organization and production methods modern and flexible, with the best quality control possible. We are a manufacturer with domestic production and global sourcing capabilities that keeps our products competitive.

NORTHLAND BRANDS

The brands of NORTHLAND MOTOR TECHNOLOGIES are designed and manufactured in America with a focus on Quality, Flexibility, Dependability and Value. Our motors are a perfect fit for a wide variety of applications, including Brushless Blowers, Brushless Drive Motors, Universal Motors and Universal Blowers. We specialize in engineered solutions, and we are happy to assist in customizing our product for your specific application needs.

CONCEPTS IN MOTION

Northland
MOTOR TECHNOLOGIES

Innovation | Power | Performance

2268 Fairview Blvd., Fairview, TN 37062
800.793.4793 | sales@sfeg.com | NorthlandMotor.com

TABLE OF CONTENTS

800.793.4793
SALES@SFEG.COM
2268 FAIRVIEW BLVD., FAIRVIEW, TN 37062
NORTHLANDMOTOR.COM

BRUSHLESS BLOWERS

Northland Motor Technologies, designs and manufactures a variety of 5.7″ Brushless Blowers. These blowers offer variable output for a wide range of vacuum or pressure applications. Standard Brushless DC Electric Motor designs include electric motor drives, coupled to high efficiency impellers, in compact, cost effective packages. Standard models are available in a wide range of input voltages.

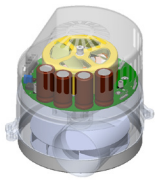

The Mercury 5.7″ BLDC blower is available in low and high voltage blowers, in thru-flow and bypass configurations. These Brushless DC Electric Motors provide output pressure up to 169″ H2O and flows up to 320 CFM. With this wide range of standard and customization for different air moving solutions, Northland has a blower that's right for any application. Northland provides customized Brushless DC Electric Motor and Blower solutions, and many direct product offerings for the industry. See the industry cross reference guide here.

INDUSTRY	INPUT VOLTS	INLET/OUTLET	INLET SIZE	FAN STAGE	NORTHLAND
116627-XX	120	STANDARD	1.25″	2 STAGE	BBA14-112SMT-00
116629-XX	120	STANDARD	1.25″	1 STAGE	BBA14-111SET-00
116630-XX	120	STANDARD	1.25″	2 STAGE	BBA14-112SET-00
116632-XX	120	STANDARD	1.25″	3 STAGE	BBA14-113SEB-00
116633-XX	120	STANDARD	1.25″	2 STAGE	BBA14-112SMB-00
116634-XX	120	STANDARD	1.25″	1 STAGE	BBA14-111SMB-00
116635-XX	120	STANDARD	1.25″	3 STAGE	BBA14-113HMB-00
116636-XX	120	STANDARD	1.25″	2 STAGE	BBA14-112HMB-00
116637-XX	120	STANDARD	1.75″	1 STAGE	BBA14-111HMB-00
116638-XX	120	STANDARD	1.25″	3 STAGE	BBA14-113SMB-00
116639-XX	120	HIGH	1.25″	2 STAGE	BBA14-112SEB-00
116640-XX	120	STANDARD	1.25″	1 STAGE	BBA14-111SEB-00
116641-XX	120	HIGH	1.75″	3 STAGE	BBA14-113HEB-00
116642-XX	120	HIGH	1.75″	2 STAGE	BBA14-112HEB-00
116643-XX	120	HIGH	1.75″	1 STAGE	BBA14-111HEB-00
116644-XX	120	HIGH	1.75″	1 STAGE	BBA14-111HMT-00
116645-XX	120	HIGH	1.75″	2 STAGE	BBA14-112HMT-00
117631-XX	240	HIGH	1.75″	2 STAGE	BBA14-212HMT-00
116647-XX	120	HIGH	1.75″	1 STAGE	BBA14-111HET-00
117643-XX	240	HIGH	1.75″	1 STAGE	BBA14-211HET-00
117637-XX	240	HIGH	1.75″	1 STAGE	BBA14-211HMT-00
116648-XX	120	HIGH	1.75″	2 STAGE	BBA14-112HET-00
117642-XX	240	HIGH	1.75″	2 STAGE	BBA14-212HET-00
117415-XX	240	STANDARD	1.25″	3 STAGE	BBA14-223SEB-00
117416-XX	240	STANDARD	1.25″	3 STAGE	BBA14-223SMB-00
117417-XX	120	STANDARD	1.25″	3 STAGE	BBA14-123SEB-00
117418-XX	120	STANDARD	1.25″	3 STAGE	BBA14-123SMB-19
117629-XX	240	STANDARD	1.25″	1 STAGE	BBA14-211SET-00
117626-XX	240	STANDARD	1.25″	1 STAGE	BBA14-211SMT-00
117630-XX	240	STANDARD	1.25″	2 STAGE	BBA14-212SET-00
117630-XX	240	STANDARD	1.25″	2 STAGE	BBA14-112SMT-00
117632-XX	240	STANDARD	1.25″	3 STAGE	BBA14-213SMB-00
117634-XX	240	STANDARD	1.25″	1 STAGE	BBA14-211SMB-00
117635-XX	240	HIGH	1.75″	3 STAGE	BBA14-213HMB-00
117637-XX	240	HIGH	1.75″	1 STAGE	BBA14-211HMB-00
117638-XX	240	STANDARD	1.25″	3 STAGE	BBA14-213SEB-00
117639-XX	240	STANDARD	1.25″	2 STAGE	BBA14-212SEB-00
117640-XX	240	STANDARD	1.25″	1 STAGE	BBA14-211SEB-00
117641-XX	240	HIGH	1.75″	3 STAGE	BBA14-213HEB-00
117636-XX	240	HIGH	1.25″	2 STAGE	BBA14-212HMB-00
117642-XX	240	HIGH	1.75″	2 STAGE	BBA14-212HEB-00
117643-XX	240	HIGH	1.75″	1 STAGE	BBA14-211HEB-00
119101-XX	120	HIGH	1.75″	1 STAGE	BBA14-121HEB-00
119102-XX	120	HIGH	1.75″	1 STAGE	BBA14-121HMB-00
119103-XX	120	HIGH	1.75″	2 STAGE	BBA14-122HEB-00
119104-XX	120	HIGH	1.75″	2 STAGE	BBA14-122HMB-00
119151-XX	240	HIGH	1.75″	1 STAGE	BBA14-221HEB-00
119152-XX	240	HIGH	1.75″	1 STAGE	BBA14-221HMB-00
119153-XX	240	HIGH	1.75″	2 STAGE	BBA14-222HEB-00
119154-XX	240	HIGH	1.75″	2 STAGE	BBA14-222HMB-00
497.3.265-361	120	STANDARD	1.25″	2 STAGE	BBA14-111SEB-00
497.3.265-551	120	STANDARD	1.25″	3 STAGE	BBA14-123SEB-00
497.3.265-352	120	STANDARD	1.25″	3 STAGE	BBA14-123SEB-00
497.3.265-311	120	STANDARD	1.25″	3 STAGE	BBA14-123SEB-00
497.3.265-471	120	STANDARD	1.25″	3 STAGE	BBA14-123SEB-00
497.3.265-322	240	HIGH	1.25″	2 STAGE	BBA14-212HMB-00
497.3.265-511	120	HIGH	1.75″	2 STAGE	BBA14-122HEB-00
497.3.265-432	120	HIGH	1.75″	2 STAGE	BBA14-122HEB-00
497.3.265-721	240	HIGH	1.75″	2 STAGE	BBA14-222HEB-00
497.3.265-761	240	HIGH	1.75″	2 STAGE	BBA14-222HEB-00
497.3.265-442	240	HIGH	1.75″	2 STAGE	BBA14-222HEB-00
497.3.265-481	240	HIGH	1.75″	2 STAGE	BBA14-222HEB-00
497.3.265-841	240	STANDARD	1.25″	3 STAGE	BBA14-223HEB-00

BBA14-11 SERIES - BRUSHLESS DC BLOWER
120 VOLT AC INPUT, MULTISTAGE BYPASS

SPECIFICATIONS

- Working Environment: 0°C to 50°C, clean working air
- Storage Temperature: -40°C to 80°C

OPTIONS (MODEL SUFFIX)

x0 Standard product (with working air inlet tube)
x1 Without working air inlet tube
x2 With working air inlet tube, with inlet tube for cooling air
x3 Without working air inlet tube, with inlet tube for cooling air
0x Standard control type (1.5 - 10 VDC signal)
1x 0.75 - 5 VDC signal
2x 4 - 20 mA signal

These motors were tested with controllers evaluated to the applicable requirements of UL 1004 and CSA CSS2.2 #100 Rotating Electrical Machines. Northland continuously submits products to various agencies for certification.

MODEL	AIR INLET AND OUTLET DAIMETER mm / inches	LENGTH (L) mm / inches	LENGTH (M) mm / inches	LENGTH (N) mm / inches	VACUUM (MAX) mBar / H2O	PRESSURE (MAX) mBar / H2O	FLOW (MAX) m3/h / sCFM	PERFORMANCE CONTROL TYPE
BBA14-111SMB	31.8 / 1.25	127 / 5.0	7.1 / 0.28	19.1 / 0.75	72.3 / 29.0	73.4 / 29.5	113.8 / 67	Built in Potentiometer
BBA14-111SEB	31.8 / 1.25	127 / 5.0	7.1 / 0.28	19.1 / 0.75	72.3 /29.0	73.4 / 29.5	113.8 / 67	1.5-10VDC Signal
BBA14-112SMB	31.8 / 1.25	150 / 5.9	29.5 / 1.16	19.1 / 0.75	118.0 / 47.4	113.0 / 53.4	109.6 / 64.5	Built in Potentiometer
BBA14-112SEB	31.8 / 1.25	150 / 5.9	29.5 / 1.16	19.1 / 0.75	118.0 / 47.4	113.0 / 53.4	109.6 / 64.5	1.5-10VDC Signal
BBA14-113SMB	31.8 / 1.25	173 / 6.8	52.6 / 2.07	19.1 / 0.75	171.0 / 68.7	191.0 / 76.7	78.3 / 46.1	Built in Potentiometer
BBA14-113SEB	31.8 / 1.25	173 / 6.8	52.6 / 2.07	19.1 / 0.75	171.0 / 68.7	191.0 / 76.7	78.3 / 46.1	1.5-10VDC Signal
BBA14-111HMB	44.5 / 1.75	130 / 5.1	10.4 / 0.41	22.6 / 0.89	62.9 / 25.2	70.3 / 28.2	191.1 / 112.5	Built in Potentiometer
BBA14-111HEB	44.5 / 1.75	130 / 5.1	10.4 / 0.41	22.6 / 0.89	62.9 / 25.2	70.3 / 28.2	191.1 / 112.5	1.5-10VDC Signal
BBA14-112HMB	44.5 / 1.75	158 / 6.1	37.7 / 1.46	22.6 / 0.89	118.4 / 47.6	129.8 / 52.1	159.9 / 94.1	Built in Potentiometer
BBA14-112HEB	44.5 / 1.75	158 / 6.1	37.7 / 1.46	22.6 / 0.89	118.4 / 47.6	129.8 / 52.1	159.9 / 94.1	1.5-10VDC Signal
BBA14-113HMB	44.5 / 1.75	185 / 7.3	64.0 / 2.52	22.6 / 0.89	169.0 / 67.8	194.2 / 78.0	154.7 / 91.0	Built in Potentiometer
BBA14-113HEB	44.5 / 1.75	185 / 7.3	64.0 / 2.52	22.6 / 0.89	169.0 / 67.8	194.2 / 7 8.0	154.7 / 91.0	1.5-10VDC Signal

EMISSIONS

- This product may require a line filter or power factor correction module to meet specific emission requirements.

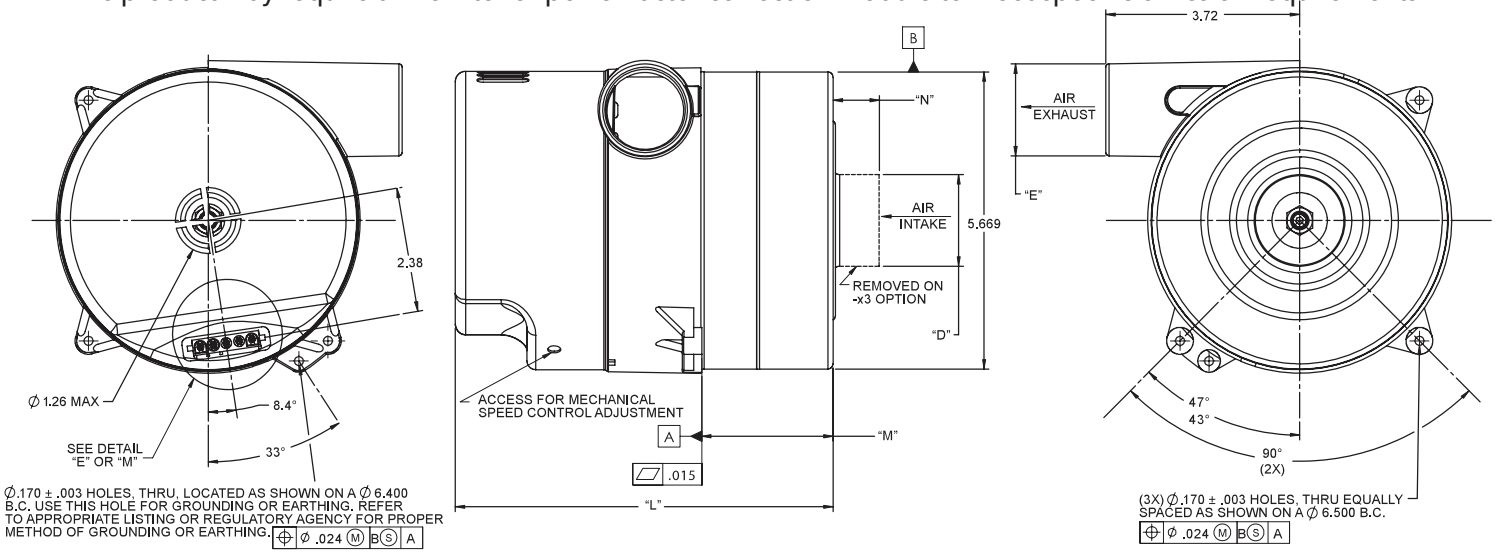

CONTACT NORTHLAND MOTOR TECHNOLOGIES AT
800.793.4793
SALES@SFEG.COM
2268 FAIRVIEW BLVD. , FAIRVIEW, TN 37062

NOTES

- Product selection should be based on a performance curve that will supply at least 5% greater pressure (or suction) at the flow point for the application.
- Refer to Mercury User Guide for proper installation and use.
- NMT recommends that customer wiring to the blower be a minimum 18AWG.

TYPICAL PRESSURE PERFORMANCE

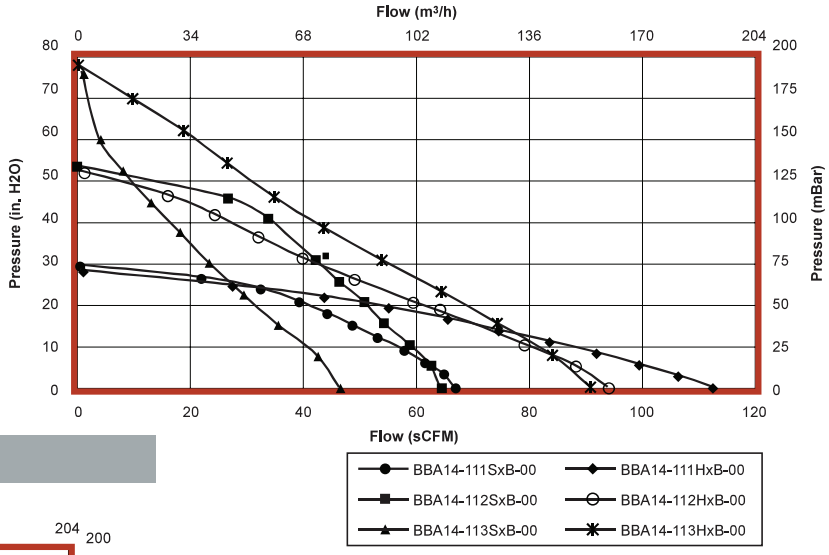

TYPICAL VACUUM PERFORMANCE

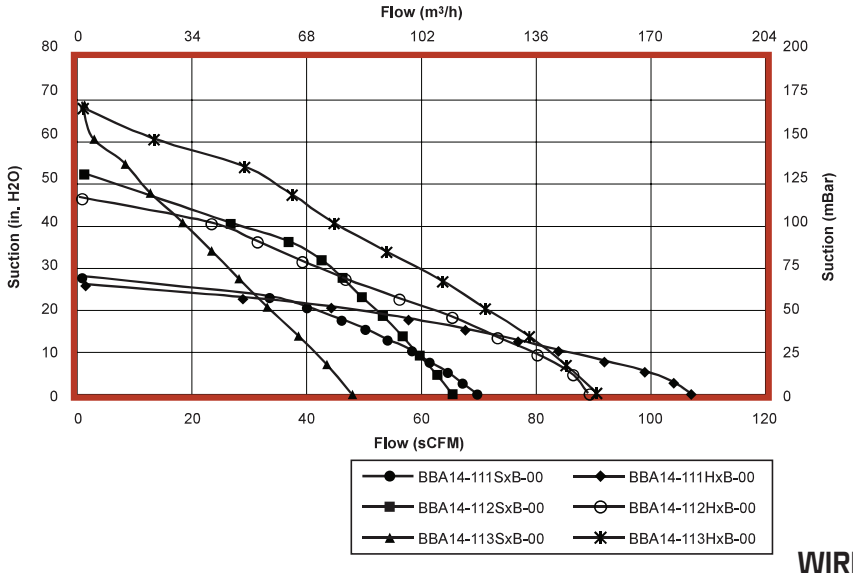

TEST METHODOLOGY

- CFM = SCFM.
- Standard air = clean, dry air.
- Density is corrected to 0.075 pounds mass per cubic foot.
- Barometric pressure is corrected to sea level of 29.92 inches of mercury.
- Temperature 68°F.
- Measurement Device - Laminar Flow Element.

NOTICES AND CAUTIONS

- This document is for informational purposes only. Northland Motor Technologies, a Scott Fetzer Company, accepts no liability for the accuracy of the information contained in this document. Northland reserves the right to modify, revise or discontinue products without prior notice.
- All test data was obtained in laboratory conditions, using a laminar flow element. Performance will vary depending on environment conditions and by application.
- The improper application of voltage will damage this product. Refer to wiring diagram above.
- Refer to Mercury User Guide for proper installation and use.

WIRING DETAILS

Blower connector mates with AMP connector housing PN 1-480763 populated with terminals AMP PN 35055-1.

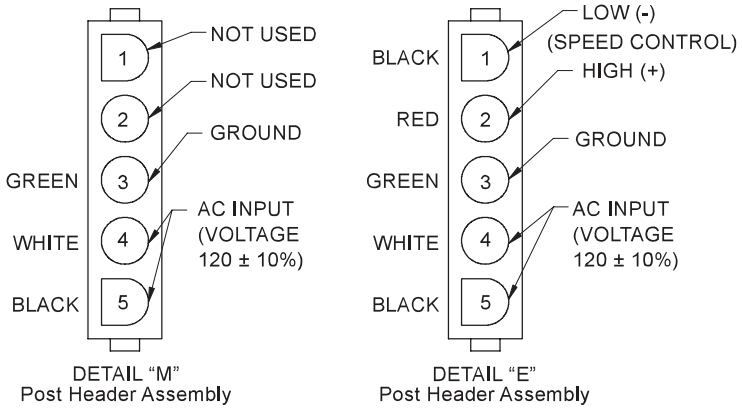

CONTACT NORTHLAND MOTOR TECHNOLOGIES AT
800.793.4793
SALES@SFEG.COM
2268 FAIRVIEW BLVD., FAIRVIEW, TN 37062

BBA14-11 SERIES - BRUSHLESS DC BLOWER
120 VOLT AC INPUT, MULTISTAGE THRUFLOW

SPECIFICATIONS

- Working Environment: 0°C to 50°C, clean working air
- Storage Temperature: -40°C to 80°C

OPTIONS (MODEL SUFFIX)

x0 Standard product (with working air inlet tube)
x1 Without working air inlet tube
0x Standard control type (1.5 - 10 VDC signal)
1x 0.75 - 5 VDC signal
2x 4 - 20 mA signal

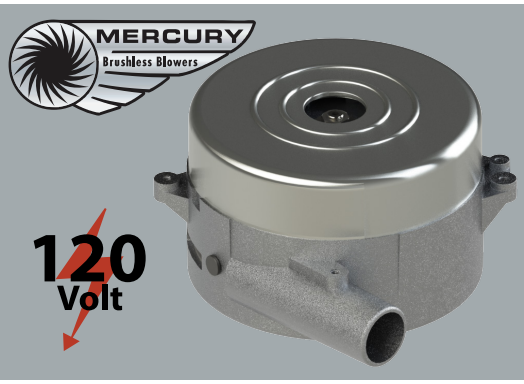

MODEL	AIR INLET AND OUTLET DAIMETER mm / inches	LENGTH (L) mm / inches	LENGTH (M) mm / inches	LENGTH (N) mm / inches	VACUUM (MAX) mBar / H2O	PRESSURE (MAX) mBar / H2O	FLOW (MAX) m3/h / sCFM	PERFORMANCE CONTROL TYPE
BBA14-111SMT-00	31.8 / 1.25	81.5 / 3.2	17.5 / 0.69	19.1 / 0.75	73.2 / 29.4	65.6 / 26.4	101.6 / 59.8	Built in Potentiometer
BBA14-111SET-00	31.8 / 1.25	81.5 / 3.2	17.5 / 0.69	19.1 / 0.75	73.2 / 29.4	65.6 / 26.4	101.6 / 59.8	1.5-10VDC Signal
BBA14-112SMT-00	31.8 / 1.25	104.7 / 4.1	40.1 / 1.58	19.1 / 0.75	132.2 / 53.1	116.6 / 46.8	101.7 / 59.6	Built in Potentiometer
BBA14-112SET-00	31.8 / 1.25	104.7 / 4.1	40.1 / 1.58	19.1 / 0.75	132.2 / 53.1	116.6 / 46.8	101.7 / 59.6	1.5-10VDC Signal
BBA14-111HMT-00	44.5 / 1.75	83.3 / 3.3	20.8 / 0.82	22.6 / 0.89	64.6 / 26.0	63.2 / 25.4	182.2 / 107.2	Built in Potentiometer
BBA14-111HET-00	44.5 / 1.75	83.3 / 3.3	20.8 / 0.82	22.6 / 0.89	64.6 / 26.0	63.2 / 25.4	182.2 / 107.2	1.5-10VDC Signal
BBA14-112HMT-00	44.5 / 1.75	110.0 / 4.3	47.8 / 1.88	22.6 / 0.89	106.8 / 42.9	111.2 / 44.7	155.2 / 91.3	Built in Potentiometer
BBA14-112HET-00	44.5 / 1.75	110.0 / 4.3	47.8 / 1.88	22.6 / 0.89	106.8 / 42.9	111.2 / 44.7	155.2 / 91.3	1.5-10VDC Signal

These motors were tested with controllers evaluated to the applicable requirements of UL 1004 and CSA CSS2.2 #100 Rotating Electrical Machines.

Northland continuously submits products to various agencies for certification.

EMISSIONS

- This product may require a line filter or power factor correction module to meet specific emission requirements.

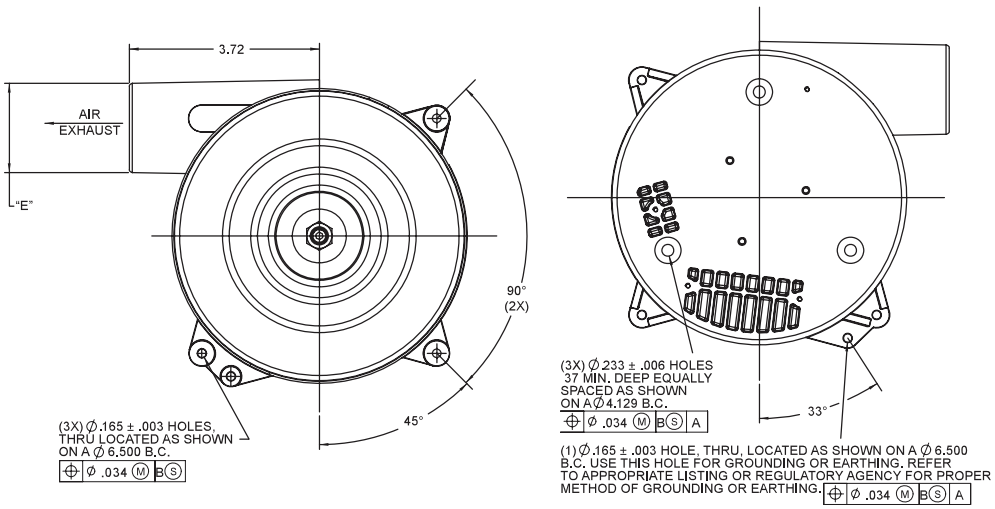

CONTACT NORTHLAND MOTOR TECHNOLOGIES AT
800.793.4793
SALES@SFEG.COM
2268 FAIRVIEW BLVD., FAIRVIEW, TN 37062

NOTES

- Product selection should be based on a performance curve that will supply at least 5% greater pressure (or suction) at the flow point for the application.
- Refer to Mercury User Guide for proper installation and use.
- NMT recommends that customer wiring to the blower be a minimum 18AWG.

TYPICAL PRESSURE PERFORMANCE

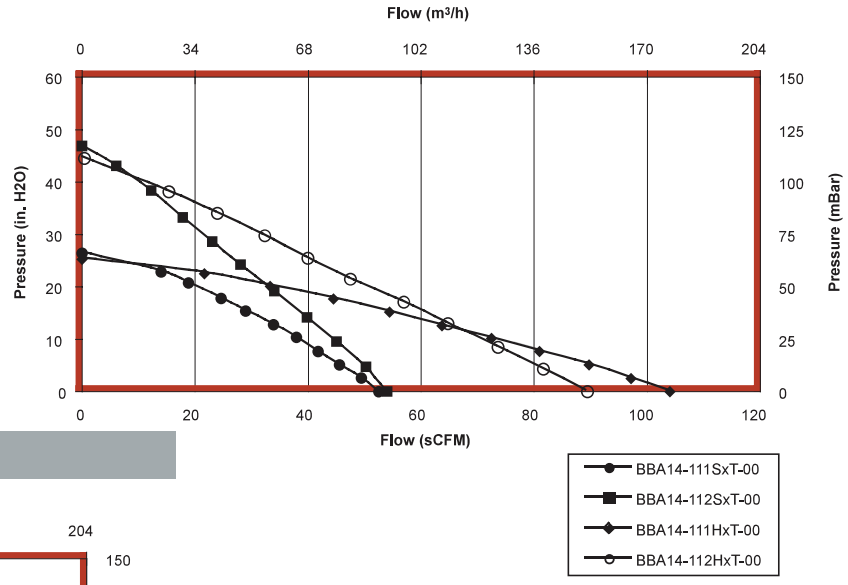

TYPICAL VACUUM PERFORMANCE

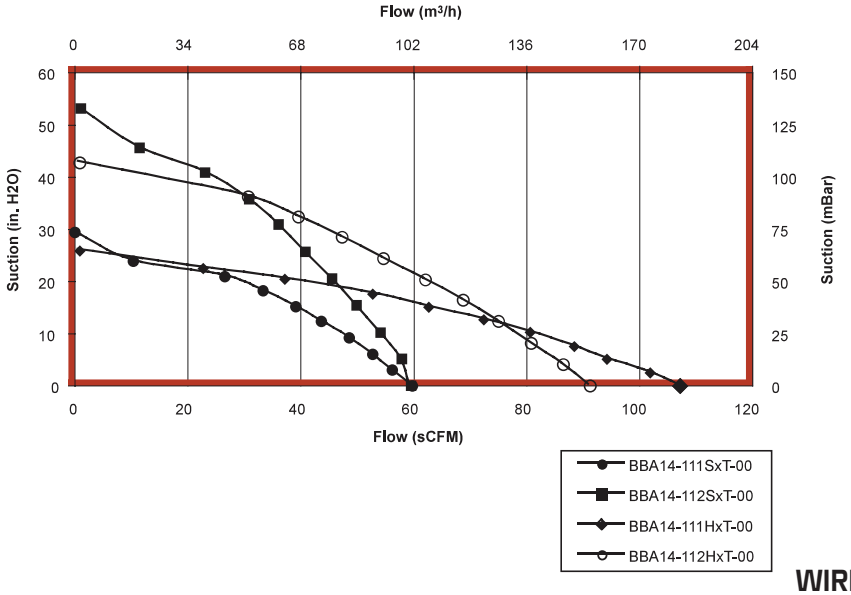

TEST METHODOLOGY

- CFM = SCFM.
- Standard air = clean, dry air.
- Density is corrected to 0.075 pounds mass per cubic foot.
- Barometric pressure is corrected to sea level of 29.92 inches of mercury.
- Temperature 68°F.
- Measurement Device - Laminar Flow Element.

NOTICES AND CAUTIONS

- This document is for informational purposes only. Northland Motor Technologies, a Scott Fetzer Company, accepts no liability for the accuracy of the information contained in this document. Northland reserves the right to modify, revise or discontinue products without prior notice.
- All test data was obtained in laboratory conditions, using a laminar flow element. Performance will vary depending on environment conditions and by application.
- The improper application of voltage will damage this product. Refer to wiring diagram above.
- Refer to Mercury User Guide for proper installation and use.

WIRING DETAILS

Blower connector mates with AMP connector housing PN 640251-6 populated with pins AMP PN 640706-2.

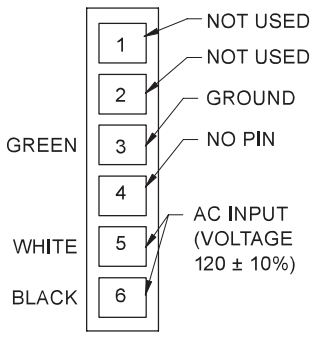

DETAIL "M"
Post Header Assembly

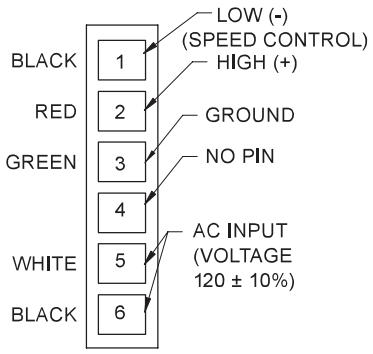

DETAIL "E"
Post Header Assembly

CONTACT NORTHLAND MOTOR TECHNOLOGIES AT
800.793.4793
SALES@SFEG.COM
2268 FAIRVIEW BLVD., FAIRVIEW, TN 37062

BBA14-12 SERIES - BRUSHLESS DC BLOWER
120 VOLT AC INPUT, MULTISTAGE BYPASS

SPECIFICATIONS

- Working Environment: 0°C to 50°C, clean working air
- Storage Temperature: -40°C to 80°C

OPTIONS (MODEL SUFFIX)

x0 Standard product (with working air inlet tube)
x1 Without working air inlet tube
x2 With working air inlet tube, with inlet tube for cooling air
x3 Without working air inlet tube, with inlet tube for cooling air
0x Standard control type (1.5 - 10 VDC signal)
1x 0.75 - 5 VDC signal
2x 4 - 20 mA signal

These motors were tested with controllers evaluated to the applicable requirements of UL 1004 and CSA CSS2.2 #100 Rotating Electrical Machines. Northland continuously submits products to various agencies for certification.

MODEL	AIR INLET AND OUTLET DAIMETER mm / inches	LENGTH (L) mm / inches	LENGTH (M) mm / inches	LENGTH (N) mm / inches	VACUUM (MAX) mBar / H2O	PRESSURE (MAX) mBar / H2O	FLOW (MAX) m3/h / sCFM	PERFORMANCE CONTROL TYPE
BBA14-123SMB	31.8 / 1.25	175 / 6.9	56.4 / 2.22	19.1 / 0.75	239.2 / 96.1	289.3 / 116.2	133.9 / 78.8	Built in Potentiometer
BBA14-123SEB	31.8 / 1.25	175 / 6.9	56.4 / 2.22	19.1 / 0.75	239.2 / 96.1	289.3 / 116.2	133.9 / 78.8	1.5-10VDC Signal
BBA14-121HMB	44.5 / 1.75	135 / 5.3	10.8 / 0.43	22.6 / 0.89	111.5 / 44.8	123.7 / 49.6	254.2 / 149.7	Built in Potentiometer
BBA14-121HEB	44.5 / 1.75	135 / 5.3	10.8 / 0.43	22.6 / 0.89	111.5 / 44.8	123.7 / 49.6	254.2 / 149.7	1.5-10VDC Signal
BBA14-122HMB	44.5 / 1.75	161 / 6.4	37.3 / 1.47	22.6 / 0.89	167.6 / 67.3	183.8 / 73.8	228.3 / 134.3	Built in Potentiometer
BBA14-122HEB	44.5 / 1.75	161 / 6.4	37.3 / 1.47	22.6 / 0.89	167.6 / 67.3	183.8 / 73.8	228.3 / 134.3	1.5-10VDC Signal

EMISSIONS

- This product may require a line filter or power factor correction module to meet specific emission requirements.

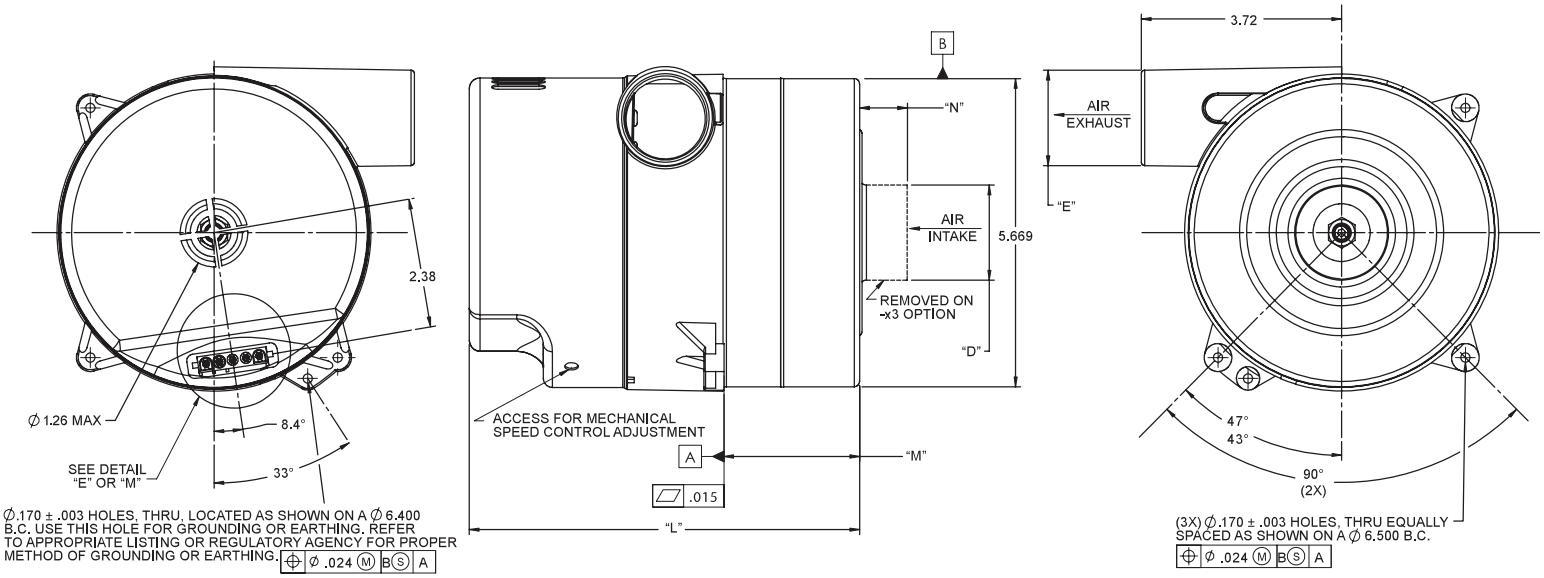

NOTES

- Product selection should be based on a performance curve that will supply at least 5% greater pressure (or suction) at the flow point for the application.
- Refer to Mercury User Guide for proper installation and use.
- NMT recommends that customer wiring to the blower be a minimum 18AWG.

TYPICAL PRESSURE PERFORMANCE

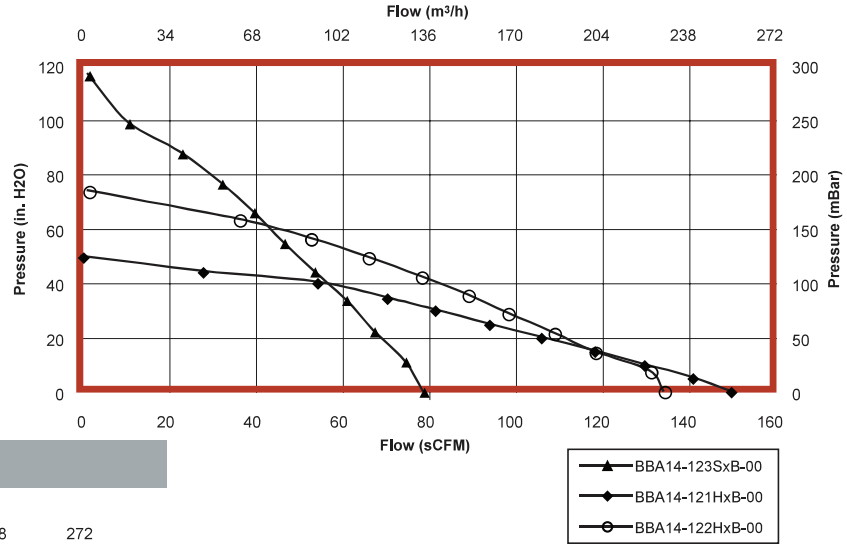

TYPICAL VACUUM PERFORMANCE

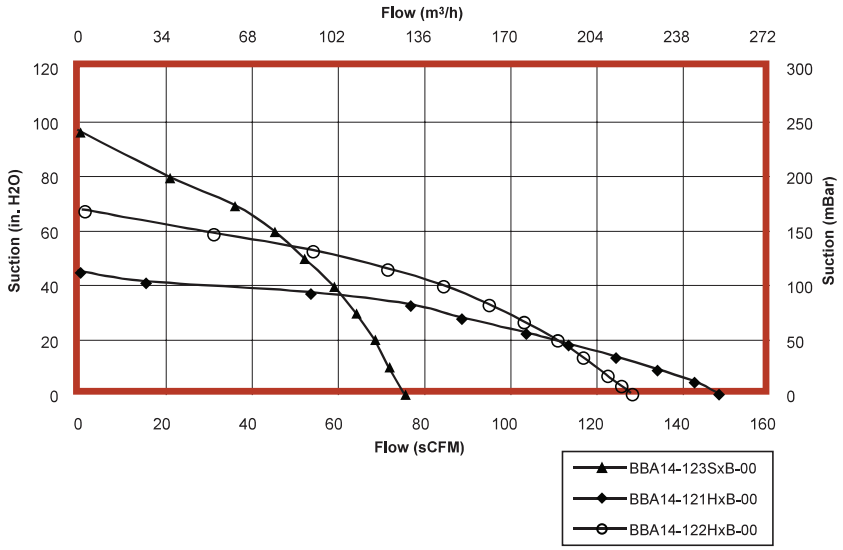

TEST METHODOLOGY

- CFM = SCFM.
- Standard air = clean, dry air.
- Density is corrected to 0.075 pounds mass per cubic foot.
- Barometric pressure is corrected to sea level of 29.92 inches of mercury.
- Temperature 68°F.
- Measurement Device - Laminar Flow Element.

NOTICES AND CAUTIONS

- This document is for informational purposes only. Northland Motor Technologies, a Scott Fetzer Company, accepts no liability for the accuracy of the information contained in this document. Northland reserves the right to modify, revise or discontinue products without prior notice.
- All test data was obtained in laboratory conditions, using a laminar flow element. Performance will vary depending on environment conditions and by application.
- The improper application of voltage will damage this product. Refer to wiring diagram above.
- Refer to Mercury User Guide for proper installation and use.

WIRING DETAILS

Blower connector mates with AMP connector housing PN 1-480763 populated with terminals AMP PN 35055-1.

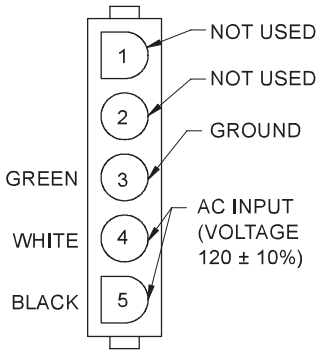

DETAIL "M"
Post Header Assembly

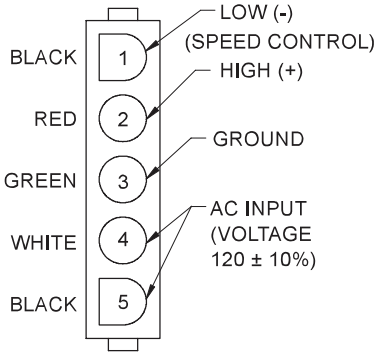

DETAIL "E"
Post Header Assembly

CONTACT NORTHLAND MOTOR TECHNOLOGIES AT
800.793.4793
SALES@SFEG.COM
2268 FAIRVIEW BLVD., FAIRVIEW, TN 37062

BBA14-21 SERIES - BRUSHLESS DC BLOWER
240 VOLT AC INPUT, MULTISTAGE BYPASS

SPECIFICATIONS

- Working Environment: 0°C to 50°C, clean working air
- Storage Temperature: -40°C to 80°C

OPTIONS (MODEL SUFFIX)

x0 Standard product (with working air inlet tube)
x1 Without working air inlet tube
x2 With working air inlet tube, with inlet tube for cooling air
x3 Without working air inlet tube, with inlet tube for cooling air
0x Standard control type (1.5 - 10 VDC signal)
1x 0.75 - 5 VDC signal
2x 4 - 20 mA signal

These motors were tested with controllers evaluated to the applicable requirements of UL 1004 and CSA CSS2.2 #100 Rotating Electrical Machines. Northland continuously submits products to various agencies for certification.

MODEL	AIR INLET AND OUTLET DAIMETER mm / inches	LENGTH (L) mm / inches	LENGTH (M) mm / inches	LENGTH (N) mm / inches	VACUUM (MAX) mBar / H2O	PRESSURE (MAX) mBar / H2O	FLOW (MAX) m3/h / sCFM	PERFORMANCE CONTROL TYPE
BBA14-211SMB	31.8 / 1.25	127 / 5.0	127 / 5.0	19.1 / 0.75	72.3 / 29.0	73.4 / 29.5	113.8 / 67	Built in Potentiometer
BBA14-211SEB	31.8 / 1.25	127 / 5.0	127 / 5.0	19.1 / 0.75	72.3 /29.0	73.4 / 29.5	113.8 / 67	1.5-10VDC Signal
BBA14-212SMB	31.8 / 1.25	150 / 5.9	150 / 5.9	19.1 / 0.75	118.0 / 47.4	113.0 / 53.4	109.6 / 64.5	Built in Potentiometer
BBA14-212SEB	31.8 / 1.25	150 / 5.9	150 / 5.9	19.1 / 0.75	118.0 / 47.4	113.0 / 53.4	109.6 / 64.5	1.5-10VDC Signal
BBA14-213SMB	31.8 / 1.25	173 / 6.8	173 / 6.8	19.1 / 0.75	171.0 / 68.7	191.0 / 76.7	78.3 / 46.1	Built in Potentiometer
BBA14-213SEB	31.8 / 1.25	173 / 6.8	173 / 6.8	19.1 / 0.75	171.0 / 68.7	191.0 / 76.7	78.3 / 46.1	1.5-10VDC Signal
BBA14-211HMB	44.5 / 1.75	130 / 5.1	130 / 5.1	22.6 / 0.89	62.9 / 25.2	70.3 / 28.2	191.1 / 112.5	Built in Potentiometer
BBA14-211HEB	44.5 / 1.75	130 / 5.1	130 / 5.1	22.6 / 0.89	62.9 / 25.2	70.3 / 28.2	191.1 / 112.5	1.5-10VDC Signal
BBA14-212HMB	44.5 / 1.75	158 / 6.1	158 / 6.1	22.6 / 0.89	118.4 / 47.6	129.8 / 52.1	159.9 / 94.1	Built in Potentiometer
BBA14-212HEB	44.5 / 1.75	158 / 6.1	158 / 6.1	22.6 / 0.89	118.4 / 47.6	129.8 / 52.1	159.9 / 94.1	1.5-10VDC Signal
BBA14-213HMB	44.5 / 1.75	185 / 7.3	185 / 7.3	22.6 / 0.89	169.0 / 67.8	194.2 / 78.0	154.7 / 91.0	Built in Potentiometer
BBA14-213HEB	44.5 / 1.75	185 / 7.3	185 / 7.3	22.6 / 0.89	169.0 / 67.8	194.2 / 7 8.0	154.7 / 91.0	1.5-10VDC Signal

EMISSIONS

- This product may require a line filter or power factor correction module to meet specific emission requirements.

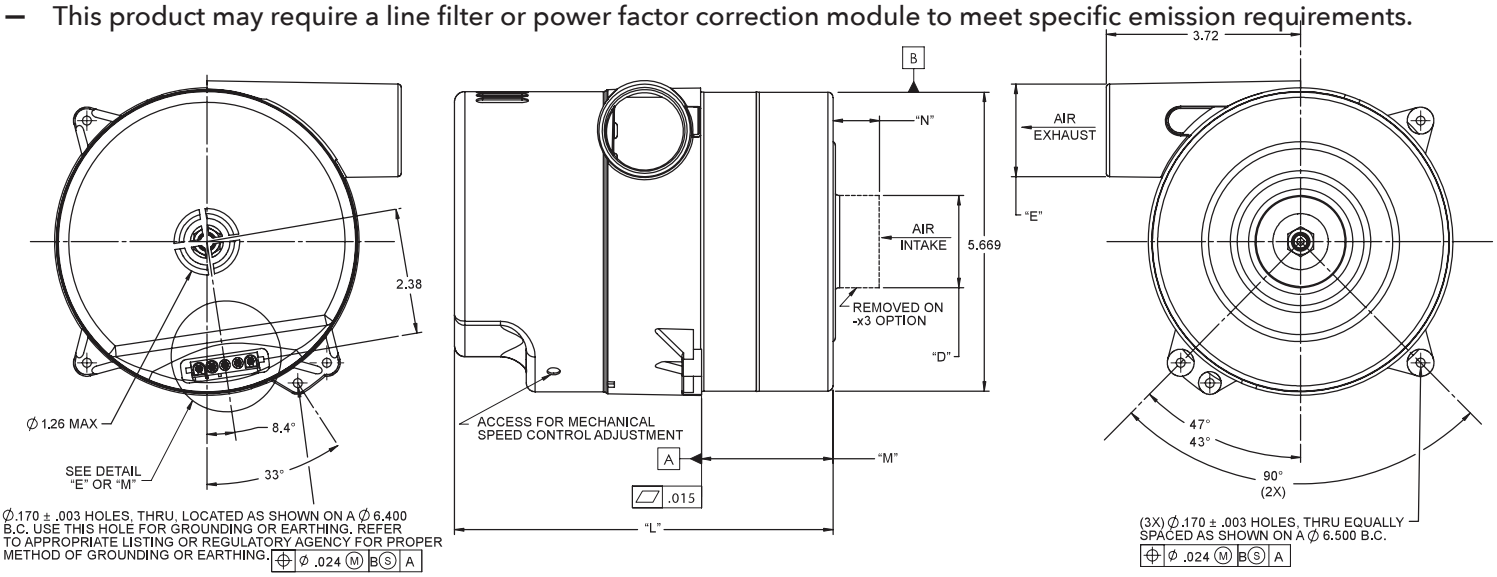

NOTES

- Product selection should be based on a performance curve that will supply at least 5% greater pressure (or suction) at the flow point for the application.
- Refer to Mercury User Guide for proper installation and use.
- NMT recommends that customer wiring to the blower be a minimum 18AWG.

TYPICAL PRESSURE PERFORMANCE

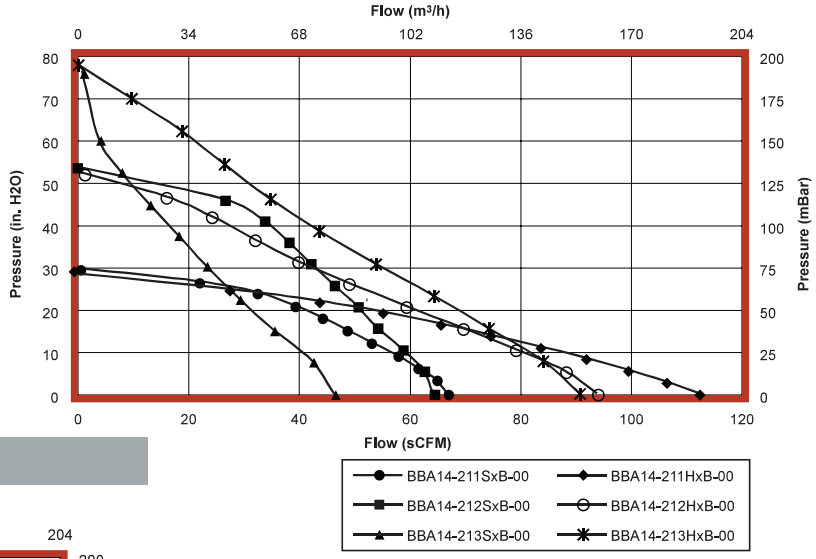

TYPICAL VACUUM PERFORMANCE

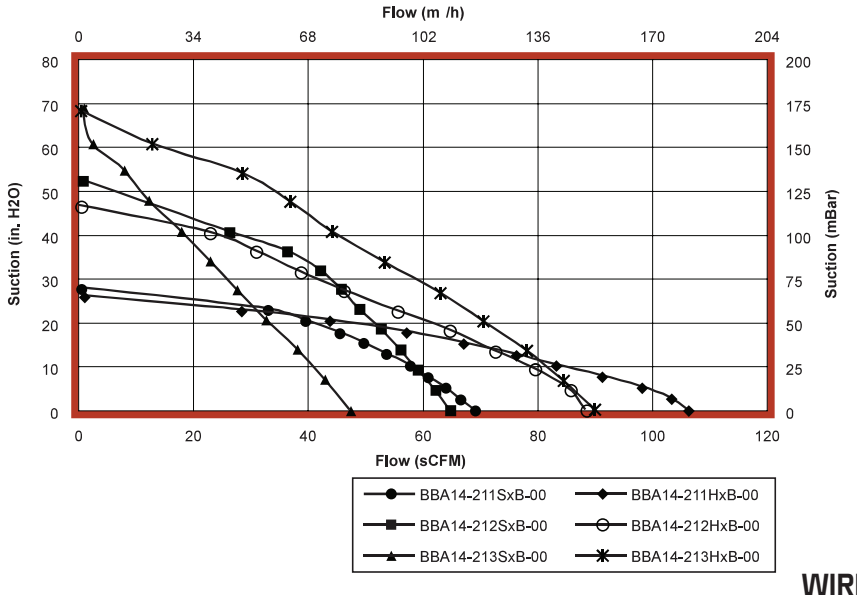

TEST METHODOLOGY

- CFM = SCFM.
- Standard air = clean, dry air.
- Density is corrected to 0.075 pounds mass per cubic foot.
- Barometric pressure is corrected to sea level of 29.92 inches of mercury.
- Temperature 68°F.
- Measurement Device - Laminar Flow Element.

NOTICES AND CAUTIONS

- This document is for informational purposes only. Northland Motor Technologies, a Scott Fetzer Company, accepts no liability for the accuracy of the information contained in this document. Northland reserves the right to modify, revise or discontinue products without prior notice.
- All test data was obtained in laboratory conditions, using a laminar flow element. Performance will vary depending on environment conditions and by application.
- The improper application of voltage will damage this product. Refer to wiring diagram above.
- Refer to Mercury User Guide for proper installation and use.

WIRING DETAILS

Blower connector mates with AMP connector housing PN 1-480763 populated with terminals AMP PN 35055-1.

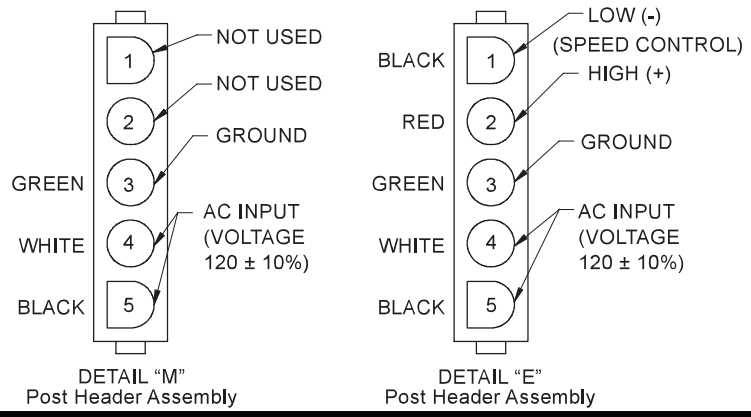

CONTACT NORTHLAND MOTOR TECHNOLOGIES AT
800.793.4793
SALES@SFEG.COM
2268 FAIRVIEW BLVD., FAIRVIEW, TN 37062

BBA14-21 SERIES - BRUSHLESS DC BLOWER
240 VOLT AC INPUT, MULTISTAGE THRUFLOW

SPECIFICATIONS

- Working Environment: 0°C to 50°C, clean working air
- Storage Temperature: -40°C to 80°C

OPTIONS (MODEL SUFFIX)

x0 Standard product (with working air inlet tube)
x1 Without working air inlet tube
0x Standard control type (1.5 - 10 VDC signal)
1x 0.75 - 5 VDC signal
2x 4 - 20 mA signal

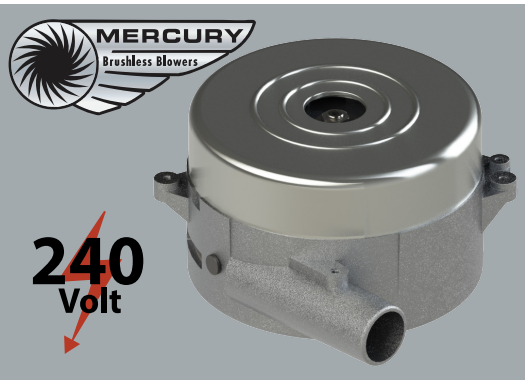

MODEL	AIR INLET AND OUTLET DAIMETER mm / inches	LENGTH (L) mm / inches	LENGTH (M) mm / inches	LENGTH (N) mm / inches	VACUUM (MAX) mBar / H2O	PRESSURE (MAX) mBar / H2O	FLOW (MAX) m3/h / sCFM	PERFORMANCE CONTROL TYPE
BBA14-211SMT-00	31.8 / 1.25	81.5 / 3.2	17.5 / 0.69	19.1 / 0.75	73.2 / 29.4	65.6 / 26.4	101.6 / 59.8	Built in Potentiometer
BBA14-211SET-00	31.8 / 1.25	81.5 / 3.2	17.5 / 0.69	19.1 / 0.75	73.2 / 29.4	65.6 / 26.4	101.6 / 59.8	1.5-10VDC Signal
BBA14-212SMT-00	31.8 / 1.25	104.7 / 4.1	40.1 / 1.58	19.1 / 0.75	132.2 / 53.1	116.6 / 46.8	101.7 / 59.6	Built in Potentiometer
BBA14-212SET-00	31.8 / 1.25	104.7 / 4.1	40.1 / 1.58	19.1 / 0.75	132.2 / 53.1	116.6 / 46.8	101.7 / 59.6	1.5-10VDC Signal
BBA14-211HMT-00	44.5 / 1.75	83.3 / 3.3	20.8 / 0.82	22.6 / 0.89	64.6 / 26.0	63.2 / 25.4	182.2 / 107.2	Built in Potentiometer
BBA14-211HET-00	44.5 / 1.75	83.3 / 3.3	20.8 / 0.82	22.6 / 0.89	64.6 / 26.0	63.2 / 25.4	182.2 / 107.2	1.5-10VDC Signal
BBA14-212HMT-00	44.5 / 1.75	110.0 / 4.3	47.8 / 1.88	22.6 / 0.89	106.8 / 42.9	111.2 / 44.7	155.2 / 91.3	Built in Potentiometer
BBA14-212HET-00	44.5 / 1.75	110.0 / 4.3	47.8 / 1.88	22.6 / 0.89	106.8 / 42.9	111.2 / 44.7	155.2 / 91.3	1.5-10VDC Signal

These motors were tested with controllers evaluated to the applicable requirements of UL 1004 and CSA CSS2.2 #100 Rotating Electrical Machines.

Northland continuously submits products to various agencies for certification.

EMISSIONS

- This product may require a line filter or power factor correction module to meet specific emission requirements.

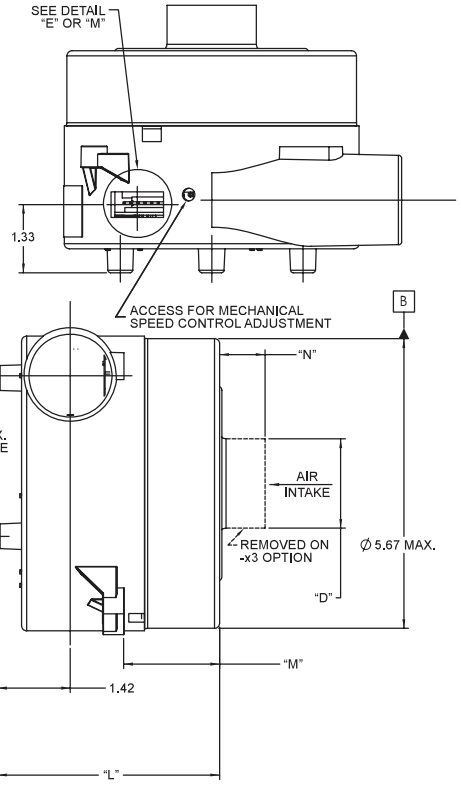

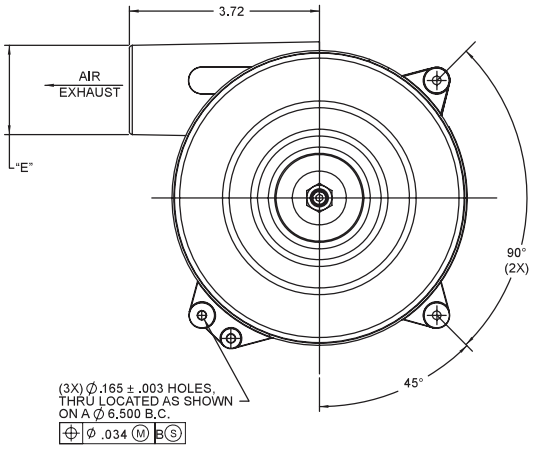

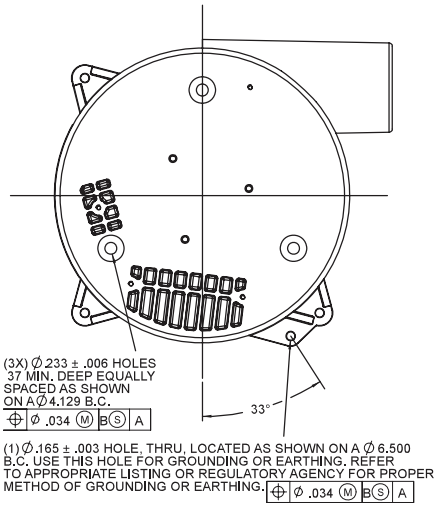

CONTACT NORTHLAND MOTOR TECHNOLOGIES AT
800.793.4793
SALES@SFEG.COM
2268 FAIRVIEW BLVD., FAIRVIEW, TN 37062

NOTES

- Product selection should be based on a performance curve that will supply at least 5% greater pressure (or suction) at the flow point for the application.
- Refer to Mercury User Guide for proper installation and use.
- NMT recommends that customer wiring to the blower be a minimum 18AWG.

TYPICAL PRESSURE PERFORMANCE

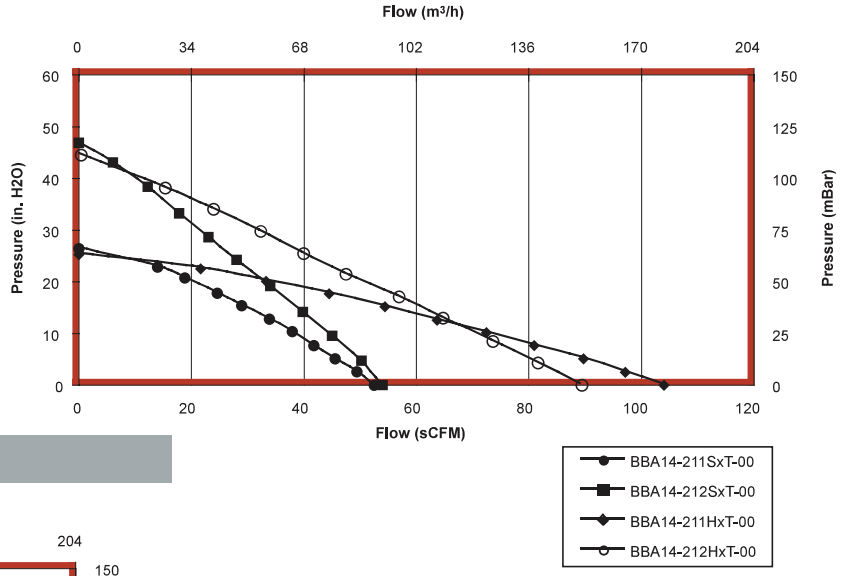

TYPICAL VACUUM PERFORMANCE

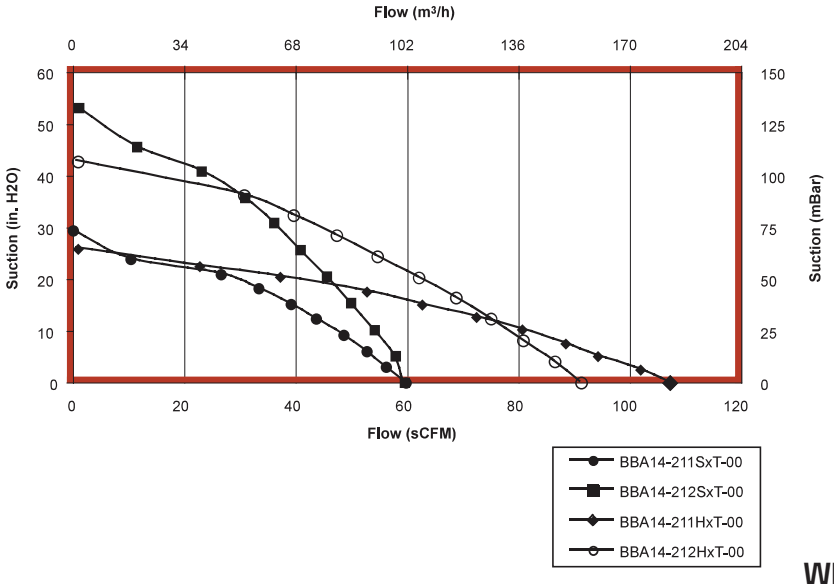

TEST METHODOLOGY

- CFM = SCFM.
- Standard air = clean, dry air.
- Density is corrected to 0.075 pounds mass per cubic foot.
- Barometric pressure is corrected to sea level of 29.92 inches of mercury.
- Temperature 68°F.
- Measurement Device - Laminar Flow Element.

WIRING DETAILS

Blower connector mates with AMP connector housing PN 640251-6 populated with pins AMP PN 640706-2.

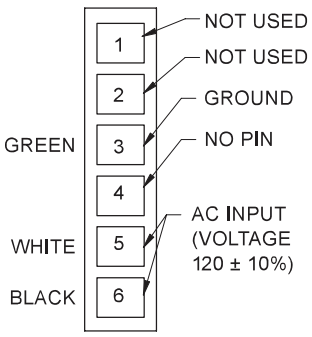

DETAIL "M"
Post Header Assembly

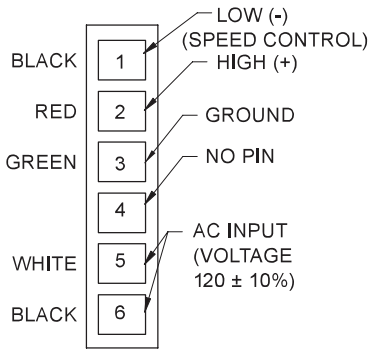

DETAIL "E"
Post Header Assembly

NOTICES AND CAUTIONS

- This document is for informational purposes only. Northland Motor Technologies, a Scott Fetzer Company, accepts no liability for the accuracy of the information contained in this document. Northland reserves the right to modify, revise or discontinue products without prior notice.
- All test data was obtained in laboratory conditions, using a laminar flow element. Performance will vary depending on environment conditions and by application.
- The improper application of voltage will damage this product. Refer to wiring diagram above.
- Refer to Mercury User Guide for proper installation and use.

CONTACT NORTHLAND MOTOR TECHNOLOGIES AT
800.793.4793
SALES@SFEG.COM
2268 FAIRVIEW BLVD., FAIRVIEW, TN 37062

BBA14-22 SERIES - BRUSHLESS DC BLOWER
240 VOLT AC INPUT, MULTISTAGE BYPASS

SPECIFICATIONS

- Working Environment: 0°C to 50°C, clean working air
- Storage Temperature: -40°C to 80°C

OPTIONS (MODEL SUFFIX)

x0 Standard product (with working air inlet tube)
x1 Without working air inlet tube
x2 With working air inlet tube, with inlet tube for cooling air
x3 Without working air inlet tube, with inlet tube for cooling air
0x Standard control type (1.5 - 10 VDC signal)
1x 0.75 - 5 VDC signal
2x 4 - 20 mA signal

These motors were tested with controllers evaluated to the applicable requirements of UL 1004 and CSA CSS2.2 #100 Rotating Electrical Machines. Northland continuously submits products to various agencies for certification.

MODEL	AIR INLET AND OUTLET DAIMETER mm / inches	LENGTH (L) mm / inches	LENGTH (M) mm / inches	LENGTH (N) mm / inches	VACUUM (MAX) mBar / H2O	PRESSURE (MAX) mBar / H2O	FLOW (MAX) m3/h / sCFM	PERFORMANCE CONTROL TYPE
BBA14-223SMB	31.8 / 1.25	175 / 6.9	52.6 / 2.07	19.1 / 0.75	355.9 / 142.9	438.5 / 176.1	135.1 / 79.5	Built in Potentiometer
BBA14-223SEB	31.8 / 1.25	175 / 6.9	52.6 / 2.07	19.1 / 0.75	355.9 / 142.9	438.5 / 176.1	135.1 / 79.5	1.5-10VDC Signal
BBA14-221HMB	44.5 / 1.75	135 / 5.3	10.5 / 0.41	22.6 / 0.89	137.8 / 55.3	155.3 / 62.4	299.4 / 176.2	Built in Potentiometer
BBA14-221HEB	44.5 / 1.75	135 / 5.3	10.5 / 0.41	22.6 / 0.89	137.8 / 55.3	155.3 / 62.4	299.4 / 176.2	1.5-10VDC Signal
BBA14-222HMB	44.5 / 1.75	161 / 6.4	37.1 / 1.46	22.6 / 0.89	219.6 / 88.2	279.6 / 112.3	257.4 / 151.5	Built in Potentiometer
BBA14-222HEB	44.5 / 1.75	161 / 6.4	37.1 / 1.46	22.6 / 0.89	219.6 / 88.2	279.6 / 112.3	257.4 / 151.5	1.5-10VDC Signal

EMISSIONS

- This product may require a line filter or power factor correction module to meet specific emission requirements.

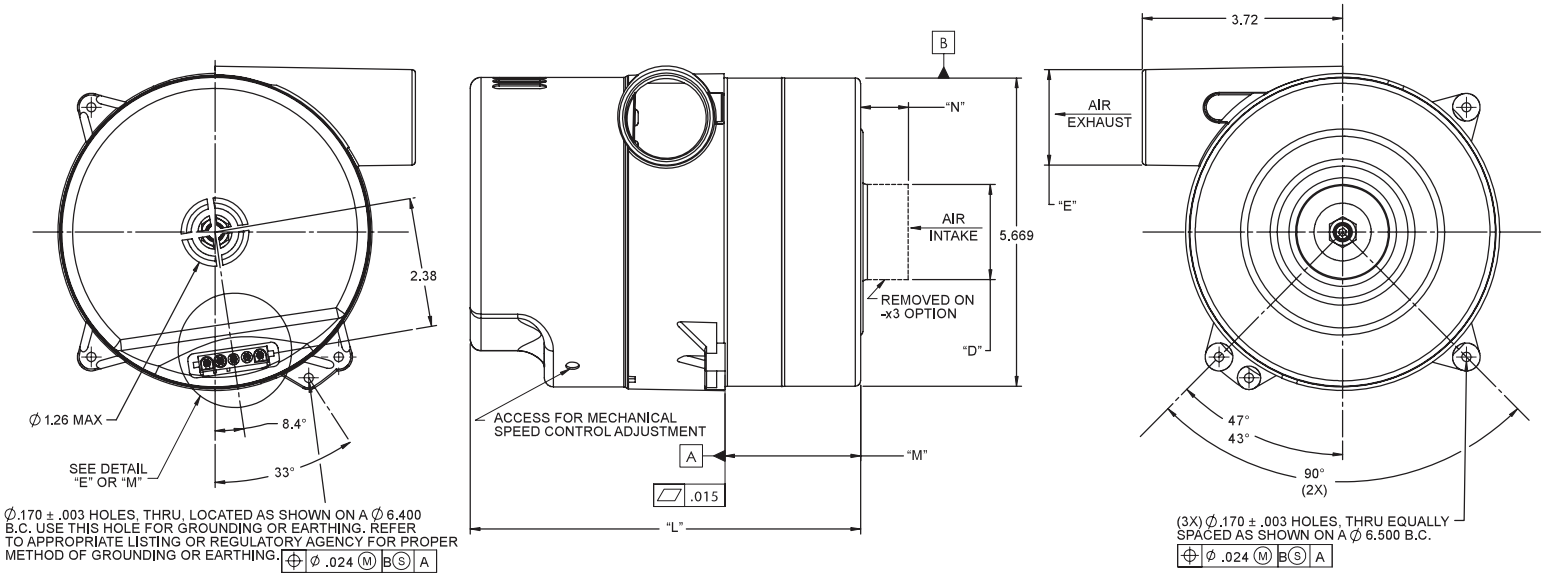

NOTES

- Product selection should be based on a performance curve that will supply at least 5% greater pressure (or suction) at the flow point for the application.
- Refer to Mercury User Guide for proper installation and use.
- NMT recommends that customer wiring to the blower be a minimum 18AWG.

TYPICAL PRESSURE PERFORMANCE

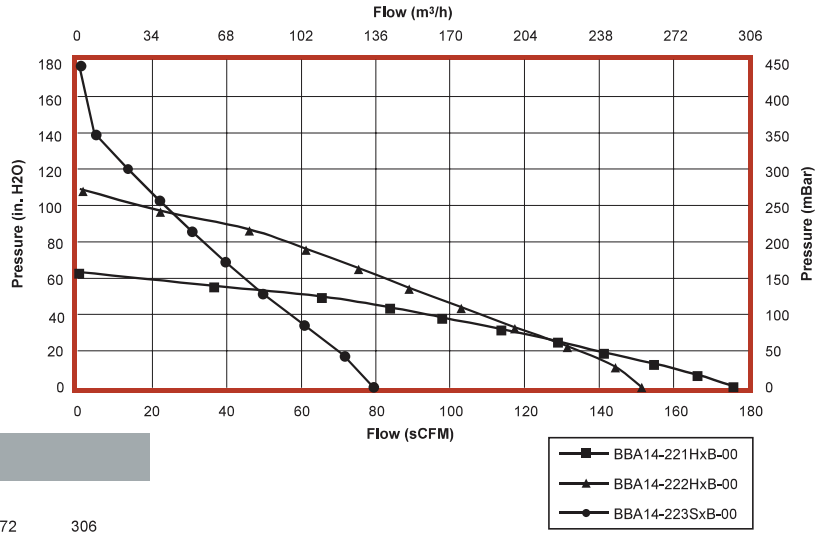

TYPICAL VACUUM PERFORMANCE

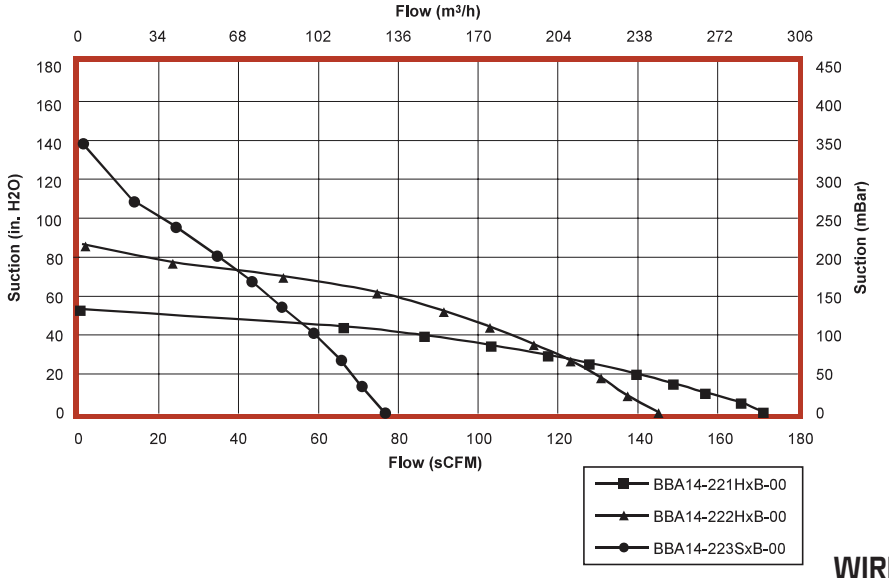

TEST METHODOLOGY

- CFM = SCFM.
- Standard air = clean, dry air.
- Density is corrected to 0.075 pounds mass per cubic foot.
- Barometric pressure is corrected to sea level of 29.92 inches of mercury.
- Temperature 68°F.
- Measurement Device - Laminar Flow Element.

NOTICES AND CAUTIONS

- This document is for informational purposes only. Northland Motor Technologies, a Scott Fetzer Company, accepts no liability for the accuracy of the information contained in this document. Northland reserves the right to modify, revise or discontinue products without prior notice.
- All test data was obtained in laboratory conditions, using a laminar flow element. Performance will vary depending on environment conditions and by application.
- The improper application of voltage will damage this product. Refer to wiring diagram above.
- Refer to Mercury User Guide for proper installation and use.

WIRING DETAILS

Blower connector mates with AMP connector housing PN 1-480763 populated with pins AMP PN 35055-1.

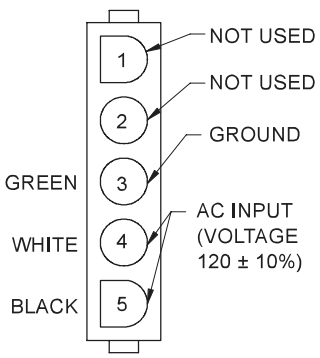

DETAIL "M"
Post Header Assembly

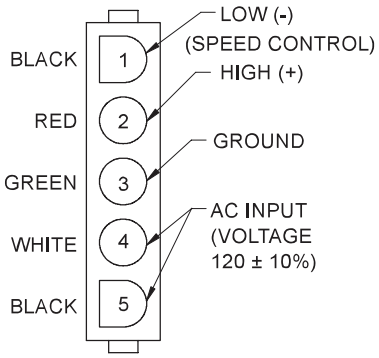

DETAIL "E"
Post Header Assembly

CONTACT NORTHLAND MOTOR TECHNOLOGIES AT
800.793.4793
SALES@SFEG.COM
2268 FAIRVIEW BLVD., FAIRVIEW, TN 37062

SPECIFICATIONS

- Working Environment: 0°C to 50°C, clean working air
- Storage Temperature: -40°C to 80°C

OPTIONS (MODEL SUFFIX)

x0 Standard product (with working air inlet tube)
x1 Without working air inlet tube
x2 With working air inlet tube, with inlet tube for cooling air
x3 Without working air inlet tube, with inlet tube for cooling air
0x Standard control type (1.5 - 10 VDC signal)
1x 0.75 - 5 VDC signal
2x 4 - 20 mA signal

MERCURY Brushless Blowers

240 Volt

These motors were tested with controllers evaluated to the applicable requirements of UL 1004 and CSA CSS2.2 #100 Rotating Electrical Machines. Northland continuously submits products to various agencies for certification.

MODEL	AIR INLET AND OUTLET DAIMETER mm / inches	LENGTH (L) mm / inches	LENGTH (M) mm / inches	VACUUM (MAX) mBar / H2O	PRESSURE (MAX) mBar / H2O	FLOW (MAX) m3/h / sCFM	PERFORMANCE CONTROL TYPE
BBA14-221UEB	63.5 / 2.5	140 / 5.5	19.0 / 0.75	99.5 / 40.0	10.0 / 50	443.4 / 261	1.5-10 VDC Signal

EMISSIONS

- This product may require a line filter or power factor correction module to meet specific emission requirements.

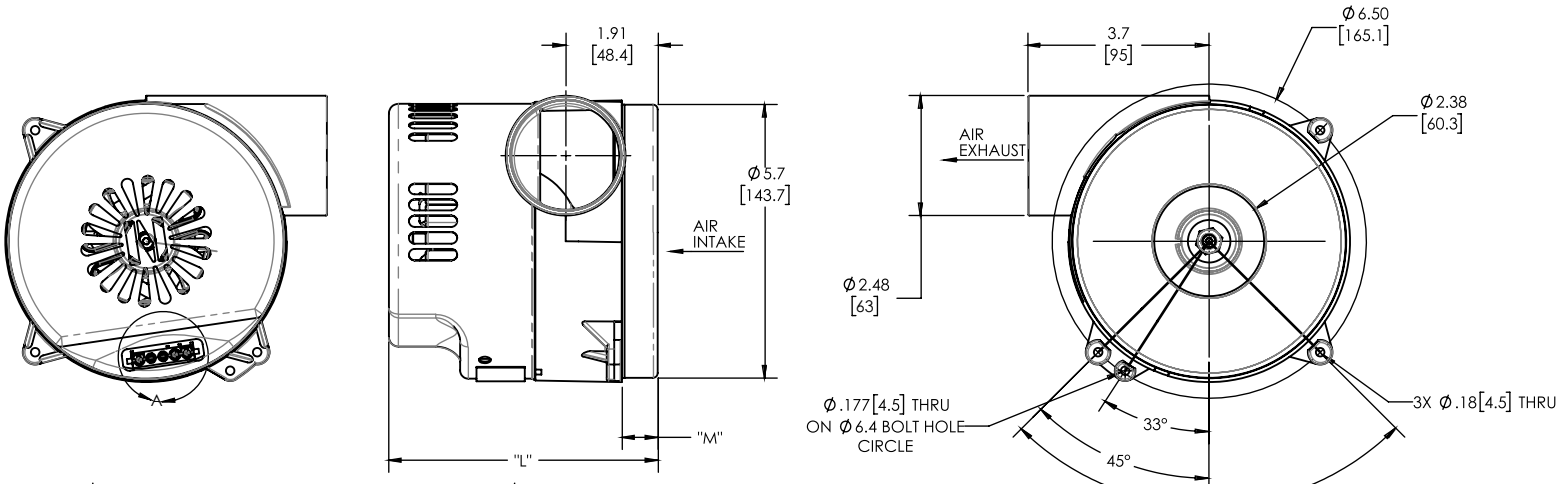

Ø.170 ± .003 HOLES, THRU, LOCATED AS SHOWN ON A Ø6.400 B.C. USE THIS HOLE FOR GROUNDING OR EARTHING. REFER TO APPROPRIATE LISTING OR REGULATORY AGENCY FOR PROPER METHOD OF GROUNDING OR EARTHING

⌖ Ø .024 Ⓜ B Ⓢ A

(3X) Ø.170 ± .003 HOLES, THRU EQUALLY SPACED AS SHOWN ON A Ø6.500 B.C.

⌖ Ø .024 Ⓜ B Ⓢ A

NOTES

- Product selection should be based on a performance curve that will supply at least 5% greater pressure (or suction) at the flow point for the application.
- Refer to Mercury User Guide for proper installation and use.
- NMT recommends that customer wiring to the blower be a minimum 18AWG.

TYPICAL PRESSURE PERFORMANCE

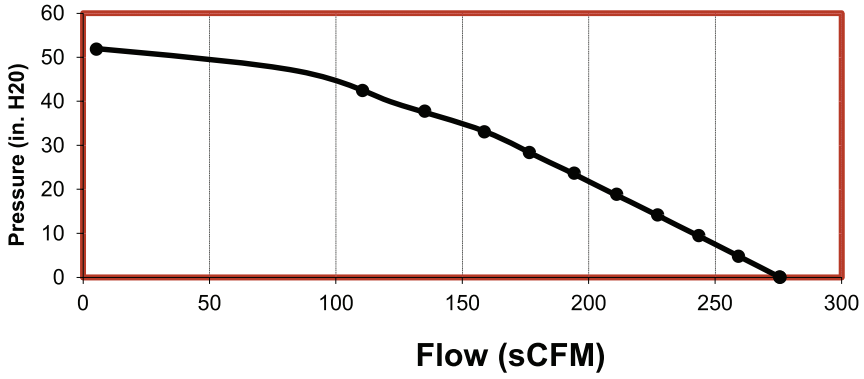

TYPICAL VACUUM PERFORMANCE

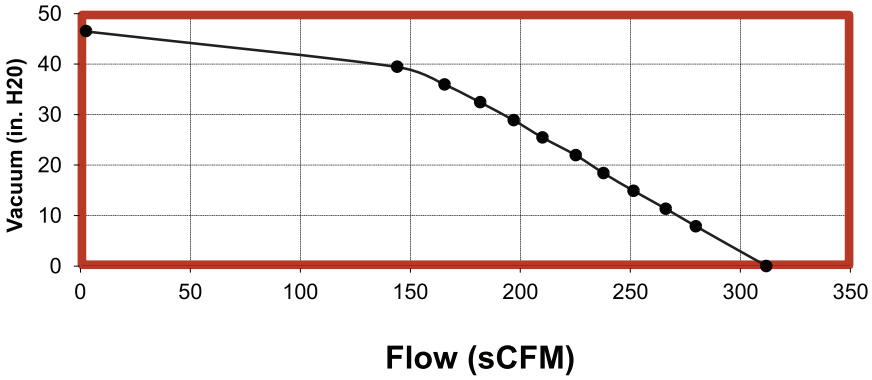

TEST METHODOLOGY

- CFM = SCFM.
- Standard air = clean, dry air.
- Density is corrected to 0.075 pounds mass per cubic foot.
- Barometric pressure is corrected to sea level of 29.92 inches of mercury.
- Temperature 68°F.
- Measurement Device - Laminar Flow Element.

NOTICES AND CAUTIONS

- This document is for informational purposes only. Northland Motor Technologies, a Scott Fetzer Company, accepts no liability for the accuracy of the information contained in this document. Northland reserves the right to modify, revise or discontinue products without prior notice.
- All test data was obtained in laboratory conditions, using a laminar flow element. Performance will vary depending on environment conditions and by application.
- The improper application of voltage will damage this product. Refer to wiring diagram above.
- Refer to Mercury User Guide for proper installation and use.

WIRING DETAILS

Blower connector mates with AMP connector housing PN 1-480763 populated with pins AMP PN 35055-1.

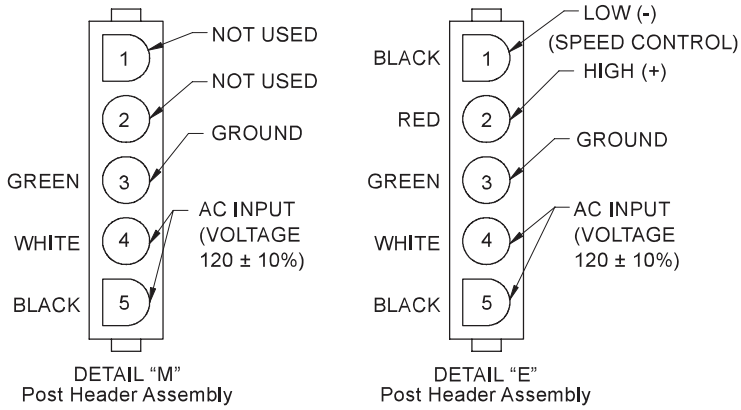

CONTACT NORTHLAND MOTOR TECHNOLOGIES AT
800.793.4793
SALES@SFEG.COM
2268 FAIRVIEW BLVD., FAIRVIEW, TN 37062

SPECIFICATIONS

- Working Environment: 0°C to 50°C, clean working air
- Storage Temperature: -40°C to 80°C

OPTIONS (MODEL SUFFIX)

x0 Standard product (with working air inlet tube)
x1 Without working air inlet tube
x2 With working air inlet tube, with inlet tube for cooling air
x3 Without working air inlet tube, with inlet tube for cooling air
0x Standard control type (1.5 - 10 VDC signal)
1x 0.75 - 5 VDC signal
2x 4 - 20 mA signal

MODEL	AIR INLET AND OUTLET DAIMETER mm / inches	LENGTH (L) mm / inches	LENGTH (M) mm / inches	VACUUM (MAX) mBar / H2O	PRESSURE (MAX) mBar / H2O	FLOW (MAX) m3/h / sCFM	PERFORMANCE CONTROL TYPE
BBA14-M11UEB	63.5 / 2.5	140 / 5.5	19.0 / 0.75	99.5 / 40.0	100 / 40	535 / 315	1.5-10 VDC Signal
BBA14-M21UEB	63.5 / 2.5	140 / 5.5	19.0 / 0.75	99.5 / 40.0	100 / 40	535 / 315	1.5/10 VDC Signal

EMISSIONS

- This product may require a line filter or power factor correction module to meet specific emission requirements.

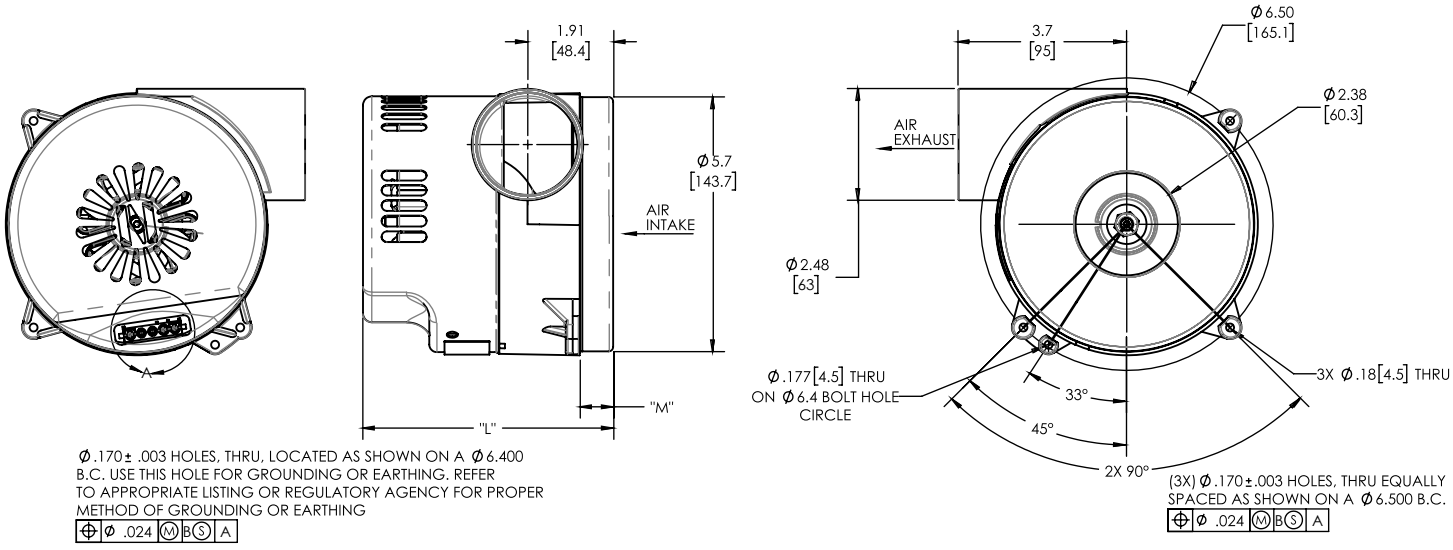

NOTICES AND CAUTIONS

- This document is for informational purposes only. Northland Motor Technologies, a Scott Fetzer Company, accepts no liability for the accuracy of the information contained in this document. Northland reserves the right to modify, revise or discontinue products without prior notice.
- All test data was obtained in laboratory conditions, using a laminar flow element. Performance will vary depending on environment conditions and by application.
- The Improper application of voltage will damage this product. Refer to wiring diagram above.
- Refer to Mercury User Guide for proper installation, and use.

NOTES

- Product selection should be based on a performance curve that will supply at least 5% greater pressure (or suction) at the flow point for the application.
- Refer to Mercury User Guide for proper installation and use.
- NMT recommends that customer wiring to the blower be a minimum 18AWG.

TYPICAL PRESSURE PERFORMANCE

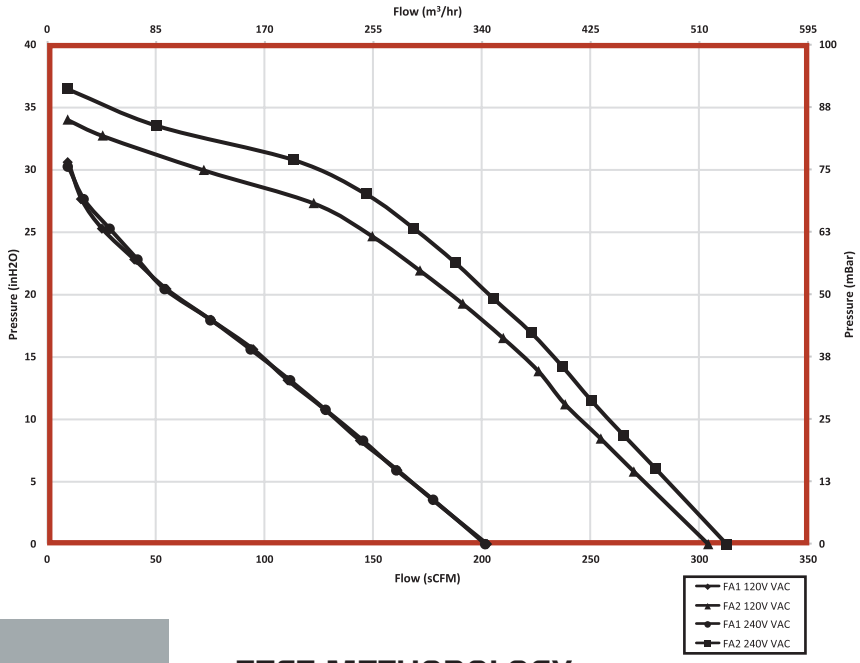

TYPICAL CURRENT PERFORMANCE

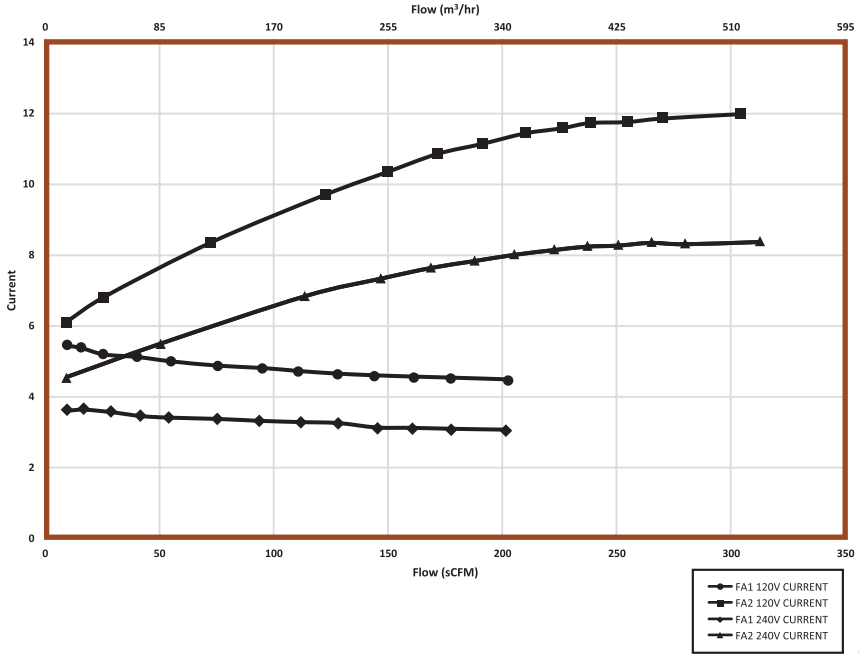

TEST METHODOLOGY

- CFM = SCFM.
- Standard air = clean, dry air.
- Density is corrected to 0.075 pounds mass per cubic foot.
- Barometric pressure is corrected to sea level of 29.92 inches of mercury.
- Temperature 68°F.
- Measurement Device - Laminar Flow Element.

WIRING DETAILS

Blower connector mates with AMP connector housing PN 1-480763 populated with pins AMP PN 35055-1.

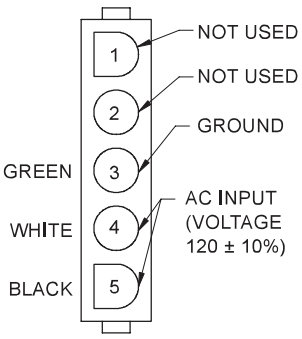

DETAIL "M"
Post Header Assembly

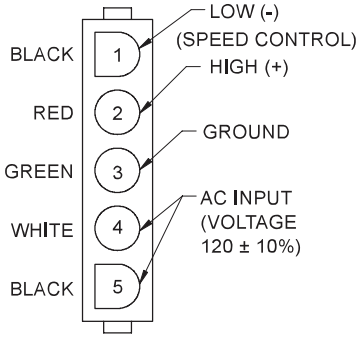

DETAIL "E"
Post Header Assembly

These motors were tested with controllers evaluated to the applicable requirements of UL 1004 and CSA CSS2.2 #100 Rotating Electrical Machines.

Northland continuously submits products to various agencies for certification.

CONTACT NORTHLAND MOTOR TECHNOLOGIES AT
800.793.4793
SALES@SFEG.COM
2268 FAIRVIEW BLVD., FAIRVIEW, TN 37062

SPECIFICATIONS

- Working Environment: 0°C to 50°C, clean working air
- Storage Temperature: -40°C to 80°C

OPTIONS (MODEL SUFFIX)

x0 Standard product (with working air inlet tube)
x1 Without working air inlet tube
x2 With working air inlet tube, with inlet tube for cooling air
x3 Without working air inlet tube, with inlet tube for cooling air
0x Standard control type (1.5 - 10 VDC signal)
1x 0.75 - 5 VDC signal
2x 4 - 20 mA signal

MERCURY Brushless Blowers

120 & 240 Volt

MODEL	AIR INLET AND OUTLET DAIMETER mm / inches	LENGTH (L) mm / inches	LENGTH (M) mm / inches	VACUUM (MAX) mBar / H2O	PRESSURE (MAX) mBar / H2O	FLOW (MAX) m3/h / sCFM	PERFORMANCE CONTROL TYPE
BBA14-M11UEB	63.5 / 2.5	140 / 5.5	19.0 / 0.75	99.5 / 40.0	100 / 40	535 / 315	1.5-10 VDC Signal
BBA14-M21UEB	63.5 / 2.5	140 / 5.5	19.0 / 0.75	99.5 / 40.0	100 / 40	535 / 315	1.5/10 VDC Signal

EMISSIONS

- This product may require a line filter or power factor correction module to meet specific emission requirements.

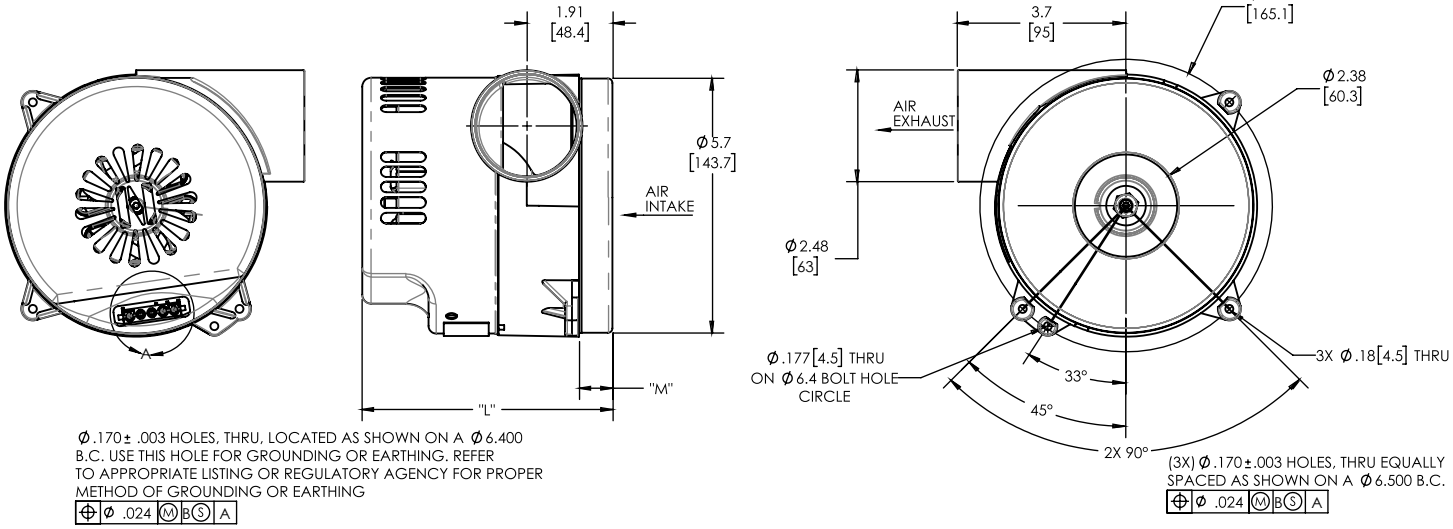

NOTICES AND CAUTIONS

- This document is for informational purposes only. Northland Motor Technologies, a Scott Fetzer Company, accepts no liability for the accuracy of the information contained in this document. Northland reserves the right to modify, revise or discontinue products without prior notice.
- All test data was obtained in laboratory conditions, using a laminar flow element. Performance will vary depending on environment conditions and by application.
- The improper application of voltage will damage this product. Refer to wiring diagram above.
- Refer to Mercury User Guide for proper installation and use.

NOTES

- Product selection should be based on a performance curve that will supply at least 5% greater pressure (or suction) at the flow point for the application.
- Refer to Mercury User Guide for proper installation and use.
- NMT recommends that customer wiring to the blower be a minimum 18AWG.

TYPICAL PRESSURE PERFORMANCE

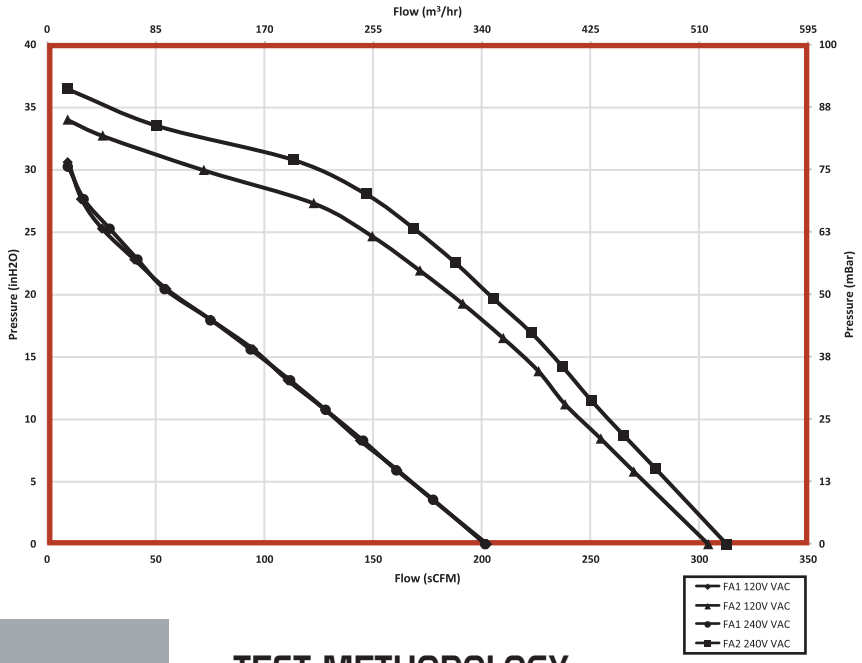

TYPICAL CURRENT PERFORMANCE

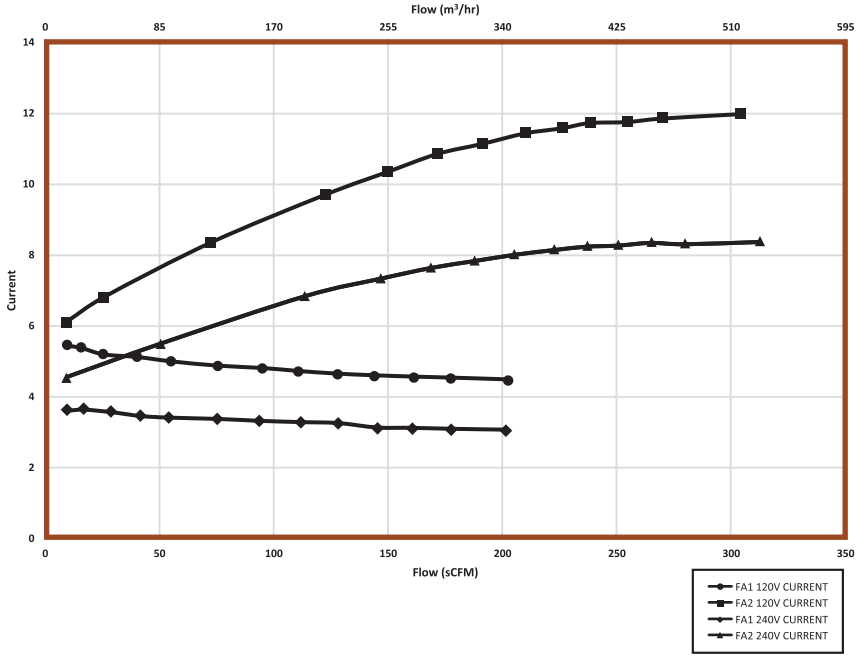

TEST METHODOLOGY

- CFM = SCFM.
- Standard air = clean, dry air.
- Density is corrected to 0.075 pounds mass per cubic foot.
- Barometric pressure is corrected to sea level of 29.92 inches of mercury.
- Temperature 68°F.
- Measurement Device - Laminar Flow Element.

WIRING DETAILS

Blower connector mates with AMP connector housing PN 1-480763 populated with pins AMP PN 35055-1.

TACHOMETER OUTPUT

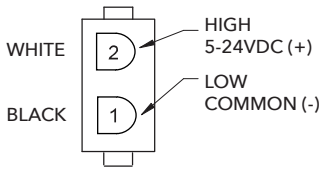

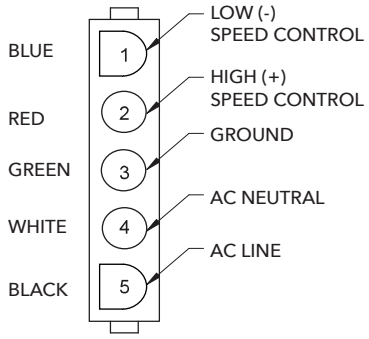

TERMINALS 35056-1
CONNECTOR 350777-1

DETAIL "A"
POST HEADER ASSEMBLY

These motors were tested with controllers evaluated to the applicable requirements of UL 1004 and CSA CSS2.2 #100 Rotating Electrical Machines.

Northland continuously submits products to various agencies for certification.

CONTACT NORTHLAND MOTOR TECHNOLOGIES AT
800.793.4793
SALES@SFEG.COM
2268 FAIRVIEW BLVD., FAIRVIEW, TN 37062

UNIVERSAL MOTORS

Northland Universal Motors has been providing high quality Universal Motors for the Vacuum, Floor Care, and Home Appliance industries since 1959. It has a tradition of motor design and excellence with an emphasis on durability, quality, and customer support. It focuses on medium to high volume product offerings, and has an advanced, fully automated Domestic Field and Armature Production line, located right outside of Nashville, Tennessee.

Northland Brushed Peripheral Bypass Motors

Bypass motors are available in single or multiple stages, 120 & 240V, and are typically 5.7" Body Diameter. These motors are equipped with cooling fans that blow fresh air over the armature and out through the vents on the sides of the motor. These motors use only clean air to cool their armatures. Unlike flow-through motors, peripheral bypass motors do not introduce dirty, unfiltered air to the motor chamber. Northland Universal Bypass Motors are designed to move clean and dry air, and are ideal for light-duty applications: Commercial canister or utility vacuums, sprayer/foggers, material handling and transfer systems, car wash, and central vacuum systems.

Northland Tangential Bypass Motor

In Tangential Bypass Motors the airflow from the fan chamber is sealed from the electrical so that none of the air from the system comes in contact with the electrical chamber. Designed to redirect all heated and/or dirty exhaust out of the motor chamber to maximize longevity, Tangential Bypass Motors are the most common in the central vacuum industry and typically have a longer life than Flow-Through and Peripheral Bypass motors.

DRIVE MOTORS

Northland Motor Technologies produce a variety of high quality custom Drive Motors for Blenders, Juicers, Vacuum Cleaners and Pumps, and other commercial and industrial applications.

Northland produces high quality single-phase 50Hz AC Universal motors for use in blenders and juicers. These can be 120/240V with a rated output of 400-1500W. Northland offers custom winding and stack heights to optimize the torque and speed requirements of the system. Universal motors are small and powerful, making them a great value.

Northland offers customers a range of motor packaging options: Complete assembly, Skeleton motors, and Part sets.

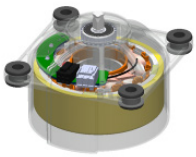

Northland Motor Technologies offer Brushless or BLDC motors applications such as blenders. The most notable characteristic of the BLDC drive motor is the increased life span and maintenance free operation. Additionally, these motors offer dramatically improved torque and efficiency which enables a higher quality blend and the ability to offer more custom blend profiles to get the best performance.

The absence of the carbon brushes reduces electric noise and eliminates sparks due to arching. A BLDC blender motor also gives the ability to add power factor correction (PFC) to the system.

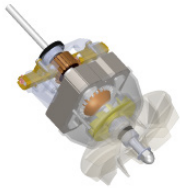

Northland Motor Technologies domestically manufacturers Universal Vacuum motors, including the legendary Kirby Vacuum motor, widely regarded as one of the most powerful and reliable in the industry. Universal motors have high starting torque and have load dependent speeds of up to 20,000 RPM, making them a great solution for Vacuum cleaner applications.

Motors are available in 120/240V with a rated output of 400-1500W. Northland offers custom winding and stack heights to optimize the torque and speed requirements of the system. Universal motors are small and powerful, making them a great value.

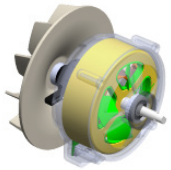

Northland Motor Technologies designs and produces Brushless (BLDC) motors for Vacuum Cleaner applications. These motors have an ultra compact design due to the Patented Integrated Fan. This design integrates the cooling fan into the motor, removing the additional parts, and improving overall efficiency.

The most notable characteristic of the BLDC drive motor is the increased life span and maintenance free operation. Northland BLDC motors are available in a variety of winding configurations to help optimize the torque and speed characteristics of the application. Northland also provides services to design custom motor controls.

NORTHLAND MOTOR TECHNOLOGIES

A Scott Fetzer Company

For more information please visit us at:

WWW.NORTHLANDMOTOR.COM

2268 Fairview Blvd.
Fairview, TN 37062

sales@sfeg.com